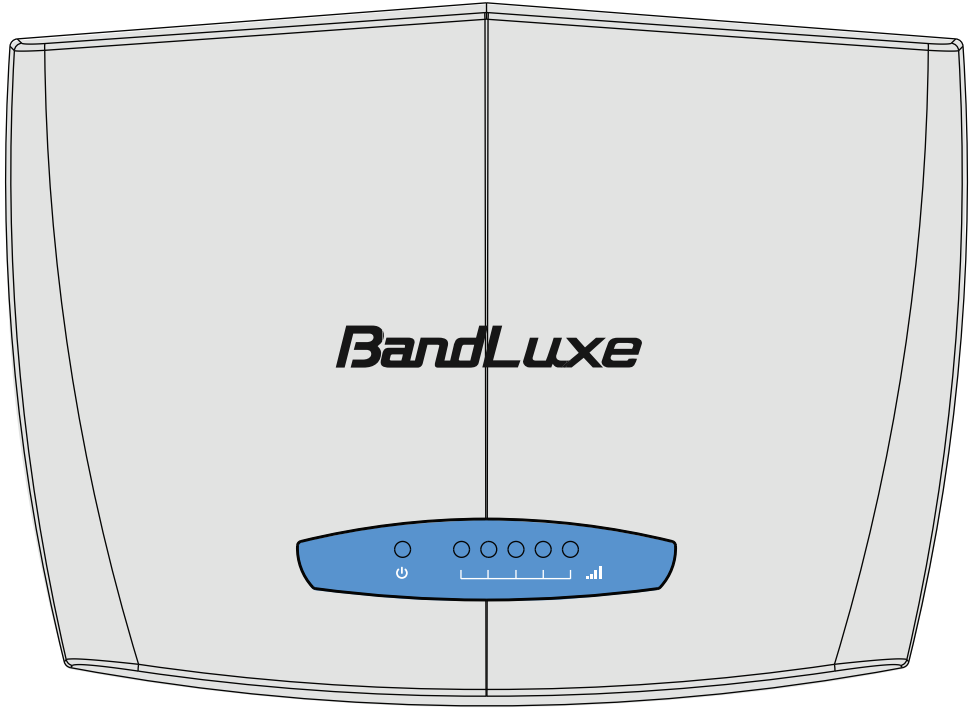
BandLuxe

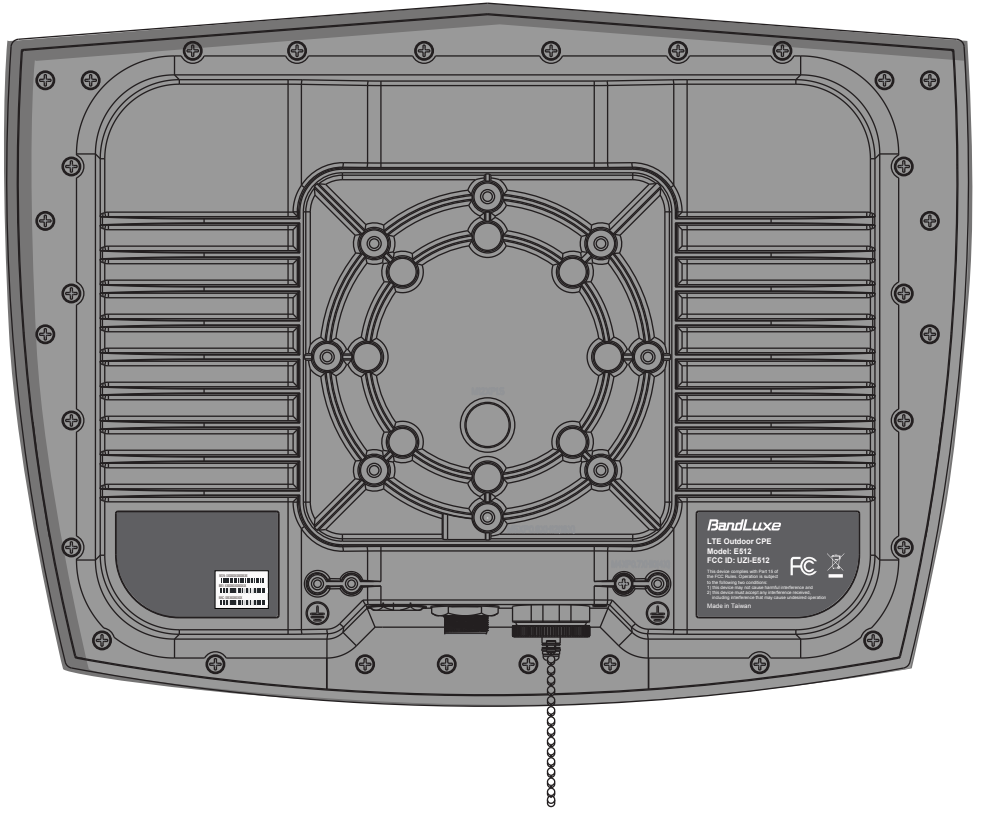
BandLuxe
LTE Outdoor CPE
Model: E512
FCC ID: UZI-E512
This device complies with Part 15 of the FCC Rules. Operation is subject to the following two conditions:
1) this device may not cause harmful interference and
2) this device must accept any interference received, including interference that may cause undesired operation.
Made in Taiwan