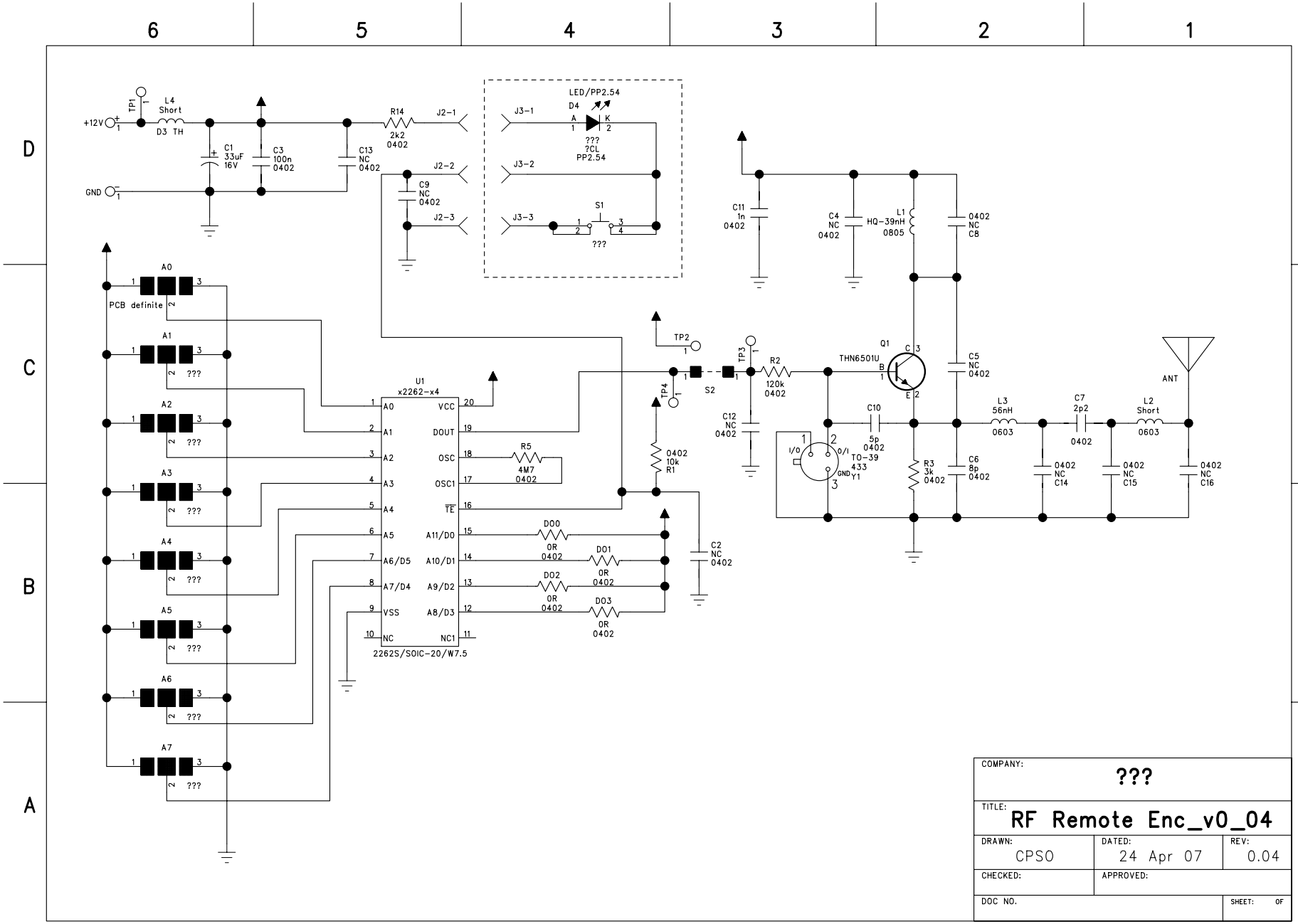


| | | |
|---|---|---|
| COMPANY: ??? | | |
| TITLE: RF Remote Enc_v0_04 | | |
| DRAWN: CPSO | DATED: 24 Apr 07 | REV: 0.04 |
| CHECKED: | APPROVED: | |
| DOC NO. | | SHEET: OF |