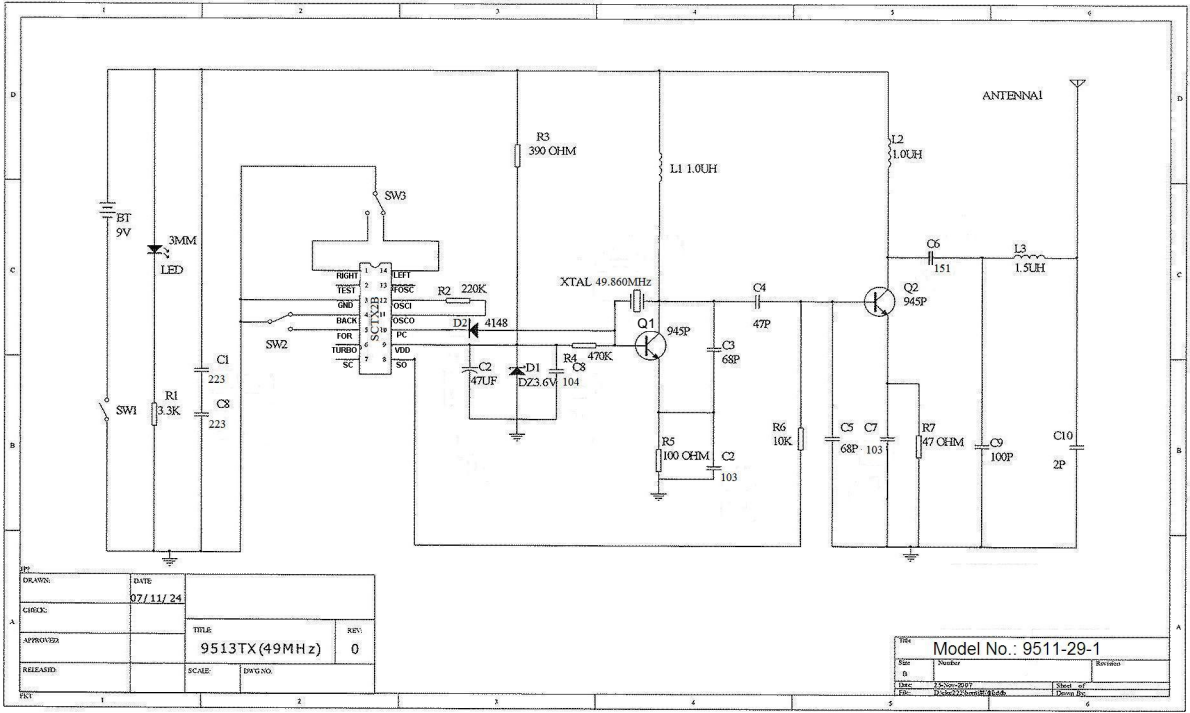
ANTENNA1
R3
390 OHM
L1 1.0UH
L2
1.0UH
SW3
BT
9V
3MM
LED
RIGHT
TEST
GND
BACK
FOR
TURBO
SC
LEFT
HOSC
OSCI
OSCO
PC
VDD
SO
R2
220K
XTAL 49.860MHz
C4
47P
Q2
945P
C6
151
L3
1.5UH
SW2
D2
4148
Q1
945P
C3
68P
C1
223
C2
47UF
D1
DZ3.6V
R4
470K
C8
104
SW1
R1
3.3K
C8
223
R5
100 OHM
C2
103
R6
10K
C5
68P
C7
103
R7
47 OHM
C9
100P
C10
2P
DRAWN:
DATE
07/11/24
CHECK:
APPROVED
RELEASED:
TITLE:
9513TX(49MHz)
REV:
0
SCALE:
DWG NO.
Model No.: 9511-29-1
Size
Number
Revision
Date: 15-Nov-2007
Sheet of
File: D:\Altec2007\work\HK\Altec\
Drawn By: