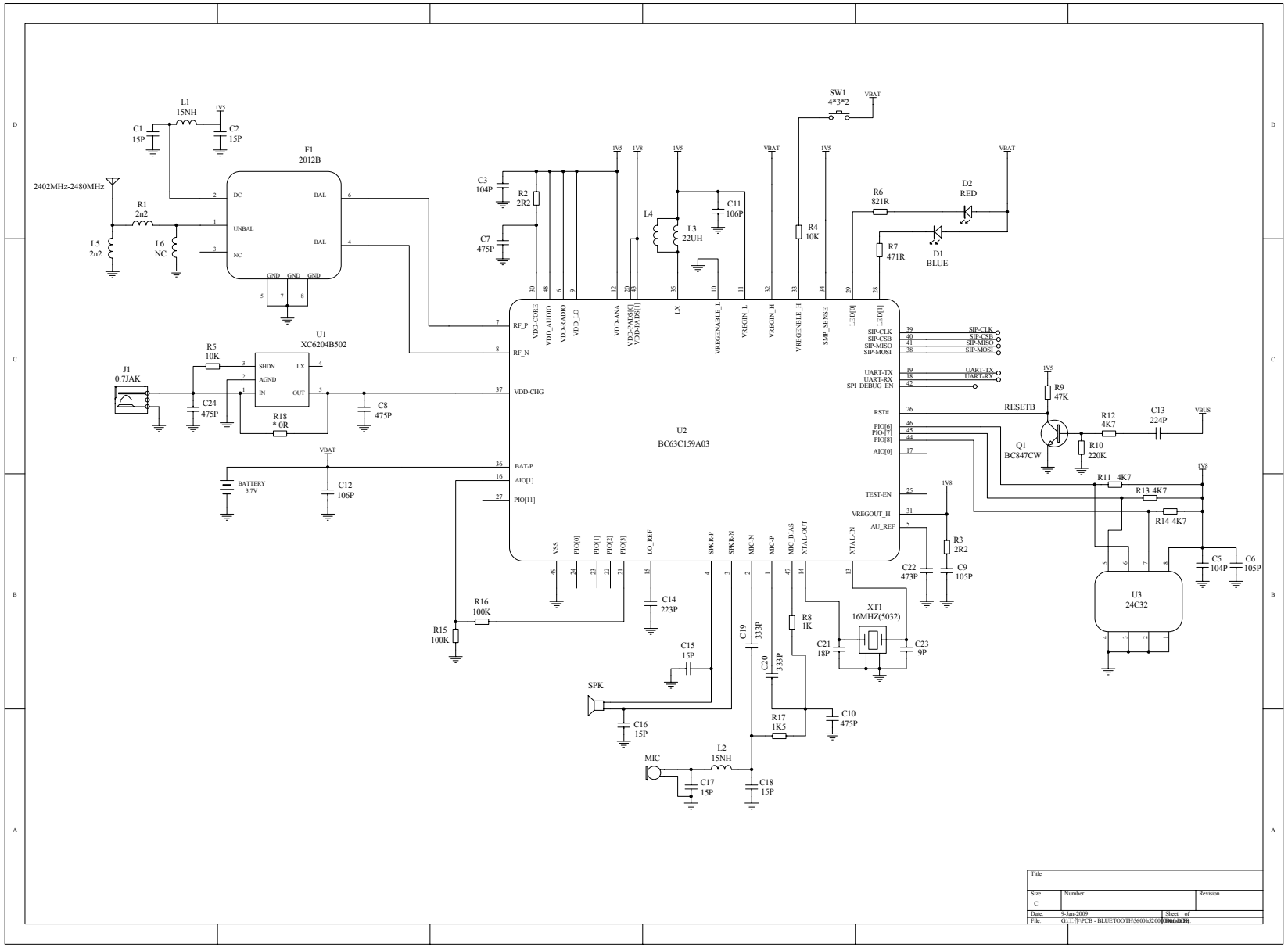
L1
15NH
1V5
C1
15P
C2
15P
F1
2012B
2402MHz-2480MHz
R1
2n2
L5
2n2
L6
NC
DC
UNBAL
NC
BAL
BAL
GND GND GND
U1
XC6204B502
SHDN
AGND
IN
LX
OUT
R5
10K
J1
0.7JAK
C24
475P
R18
* 0R
C8
475P
BATTERY
3.7V
C12
106P
VBAT
C3
104P
R2
2R2
C7
475P
L4
L3
22UH
C11
106P
SW1
4*3*2
R4
10K
R6
821R
D2
RED
R7
471R
D1
BLUE
U2
BC63C159A03
RF_P
RF_N
VDD-CHG
BAT-P
AIO[1]
PIO[11]
VDD-CORE
VDD_AUDIO
VDD-RADIO
VDD_LO
VDD-ANA
VDD-PADS[0]
VDD-PADS[1]
LX
VREGENABLE_L
VREGIN_L
VREGIN_H
VREGENBLE_H
SMP_SENSE
LED[0]
LED[1]
SIP-CLK
SIP-CSB
SIP-MISO
SIP-MOSI
UART-TX
UART-RX
SPI_DEBUG_EN
RST#
PIO[6]
PIO[7]
PIO[8]
AIO[0]
TEST-EN
VREGOUT_H
AU_REF
VSS
PIO[0]
PIO[1]
PIO[2]
PIO[3]
LO_REF
SPKR-P
SPKR-N
MIC-N
MIC-P
MIC_BIAS
XTAL-OUT
XTAL-IN
R9
47K
RESETB
Q1
BC847CW
R10
220K
R12
4K7
C13
224P
VBUS
R11 4K7
R13 4K7
R14 4K7
C5
104P
C6
105P
U3
24C32
R3
2R2
C22
473P
C9
105P
C14
223P
R16
100K
R15
100K
C15
15P
C19
333P
C20
333P
R8
1K
XT1
16MHZ(5032)
C21
18P
C23
9P
SPK
C16
15P
R17
1K5
C10
475P
MIC
L2
15NH
C17
15P
C18
15P
Title
Size
C
Number
Revision
Date: 9-Jan-2009
Sheet of
File: G:\工作\PCB - BLUETOOTH\3600\5200\