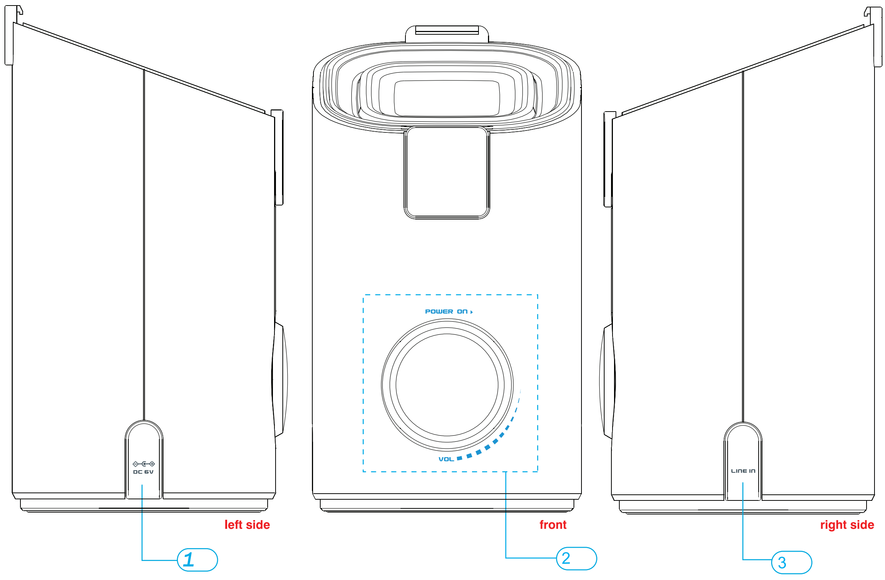

Features

Function	Artwork
DC 6 V	PM5 Grey 432C
ON / VOL	PM5 Blue 7461C
Line in	PM5 Grey 432C

SCALE 1:1

PGD	Graphic Specification
Date:	Project Code: CEW020
Model No: Outdoor Speaker	Sheet No: 1 of 3
Dimensions: MM (DWG not to Scale)	File Reference:
Designed by: ProductSolutions	

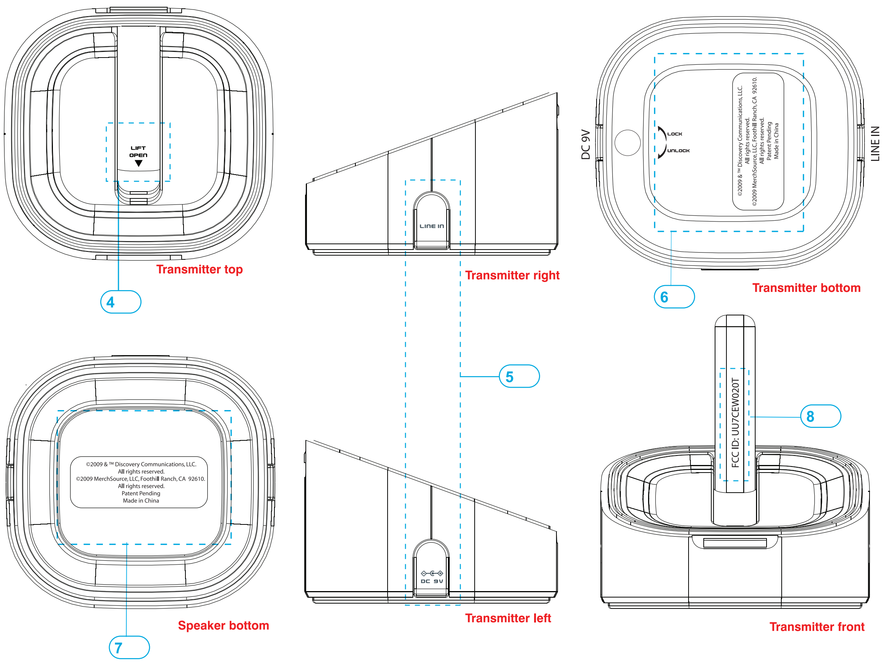

Features

Function	Artwork
Transmitter top	White
Line in / DC 9 V	PM5 Grey 432C
LOCK	Engraving 0.2-0.3mm
bottom	Engraving 0.2-0.3mm
Antenna	Engraving 0.2-0.3mm

SCALE 1:1

PGD	Graphic Specification
Date:	Project Code: CEW020
Model No: Outdoor Speaker	Sheet No: 2 of 3
Dimensions: MM (DWG not to Scale)	File Reference:
Designed by: ProductSolutions	

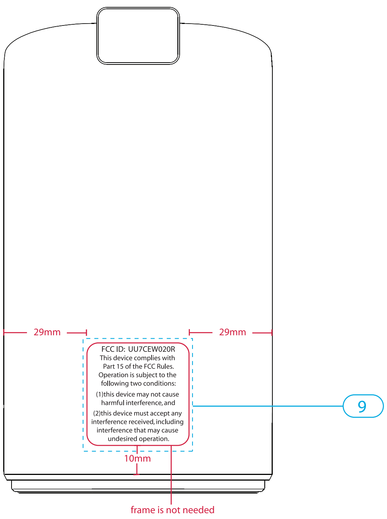

Features

Function	Artwork
FCC Statement	Engraving 0.2-0.3mm

SCALE 1:1

PGD	Graphic Specification
Date:	Project Code: CEW020
Model No: Outdoor Speaker	Sheet No: 3 of 3
Dimensions: MM (DWG not to Scale)	File Reference:
Designed by: ProductSolutions	