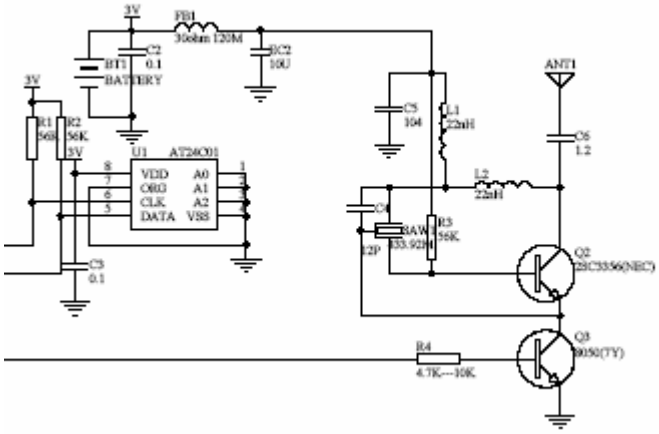
3V
FB1
30ohm 120M
C2
0.1
BT1
BATTERY
EC2
10U
3V
R1
56K
R2
56K
3V
U1
AT24C01
8
7
6
5
VDD
OSD
CLK
DATA
A0
A1
A2
VSS
1
2
3
4
C3
0.1
C5
104
L1
22nH
ANT1
C6
1.2
L2
22nH
C4
12P
SAW
433.92M
R3
56K
Q2
2SC3356(NEC)
Q3
9050(TY)
R4
4.7K---10K