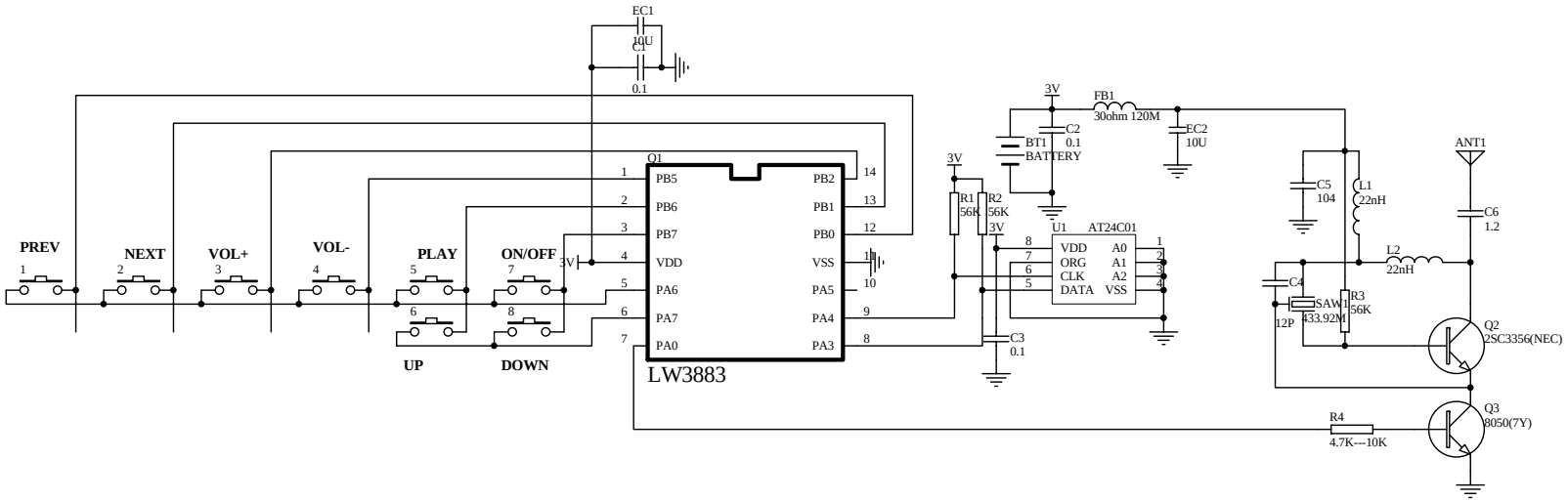
EC1
10U
C1
0.1
3V
FB1
30ohm 120M
C2
0.1
BT1
BATTERY
EC2
10U
ANT1
C5
104
L1
22nH
C6
1.2
L2
22nH
C4
12P
SAW1
433.92M
R3
56K
Q2
2SC3356(NEC)
Q3
8050(7Y)
R4
4.7K---10K
Q1
PB5
PB6
PB7
VDD
PA6
PA7
PA0
PB2
PB1
PB0
VSS
PA5
PA4
PA3
LW3883
PREV
NEXT
VOL+
VOL-
PLAY
ON/OFF
UP
DOWN
R1
56K
R2
56K
C3
0.1
U1
AT24C01
VDD
ORG
CLK
DATA
A0
A1
A2
VSS