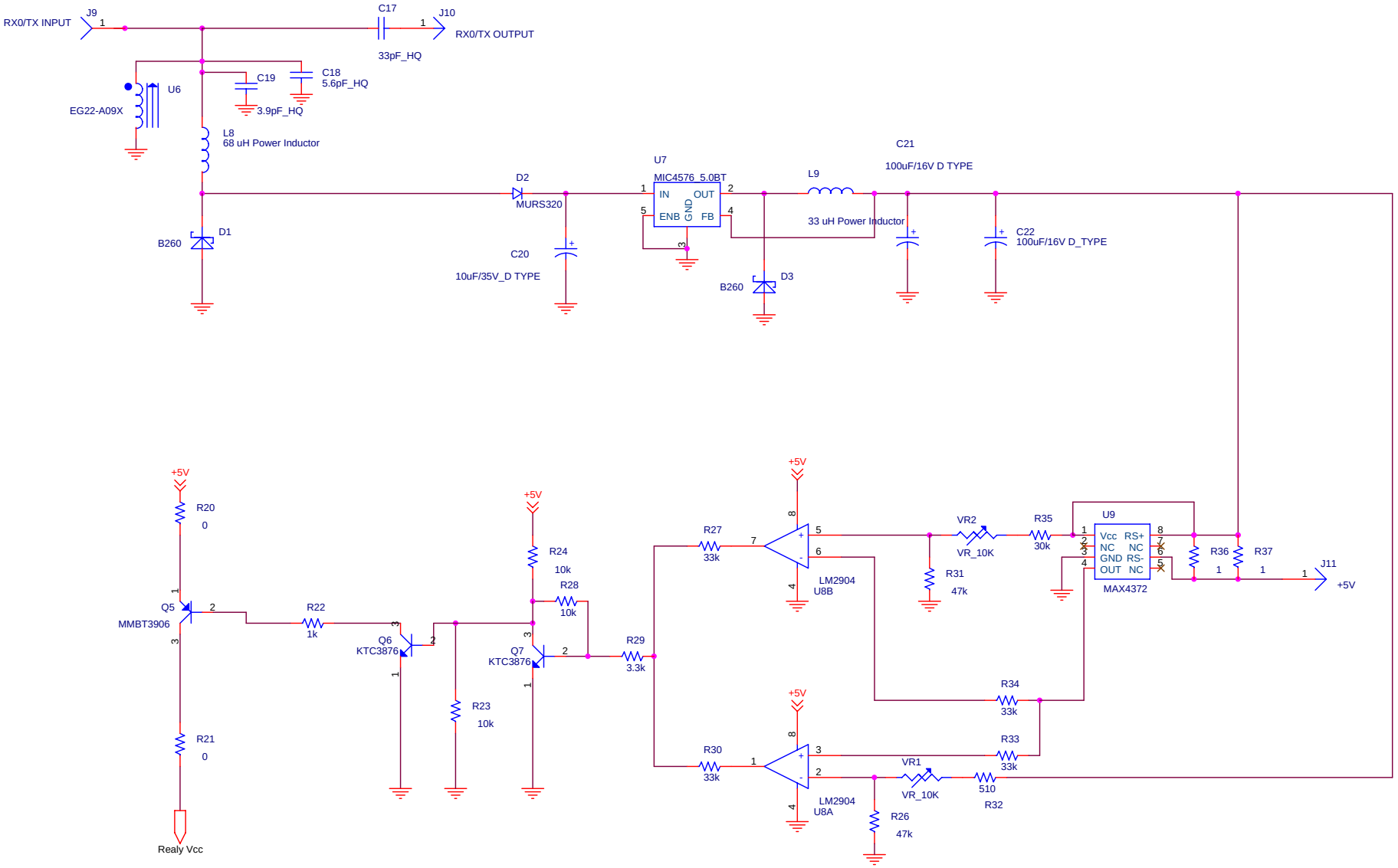
RX0/TX INPUT
J9
C17
J10
RX0/TX OUTPUT
33pF_HQ
C19
C18
5.6pF_HQ
3.9pF_HQ
U6
EG22-A09X
L8
68 uH Power Inductor
U7
MIC4576_5.0BT
IN
OUT
GND
ENB
FB
D2
MURS320
L9
33 uH Power Inductor
C21
100uF/16V D TYPE
C22
100uF/16V D_TYPE
B260
D1
C20
10uF/35V_D TYPE
B260
D3
+5V
R20
0
Q5
MMBT3906
R22
1k
Q6
KTC3876
R23
10k
R21
0
Realy Vcc
R24
10k
R28
10k
Q7
KTC3876
R29
3.3k
R27
33k
R30
33k
LM2904
U8B
LM2904
U8A
VR2
VR_10K
R35
30k
R31
47k
R34
33k
R33
33k
VR1
VR_10K
510
R32
R26
47k
U9
Vcc
RS+
NC
NC
GND
RS-
OUT
NC
MAX4372
R36
1
R37
1
J11
+5V

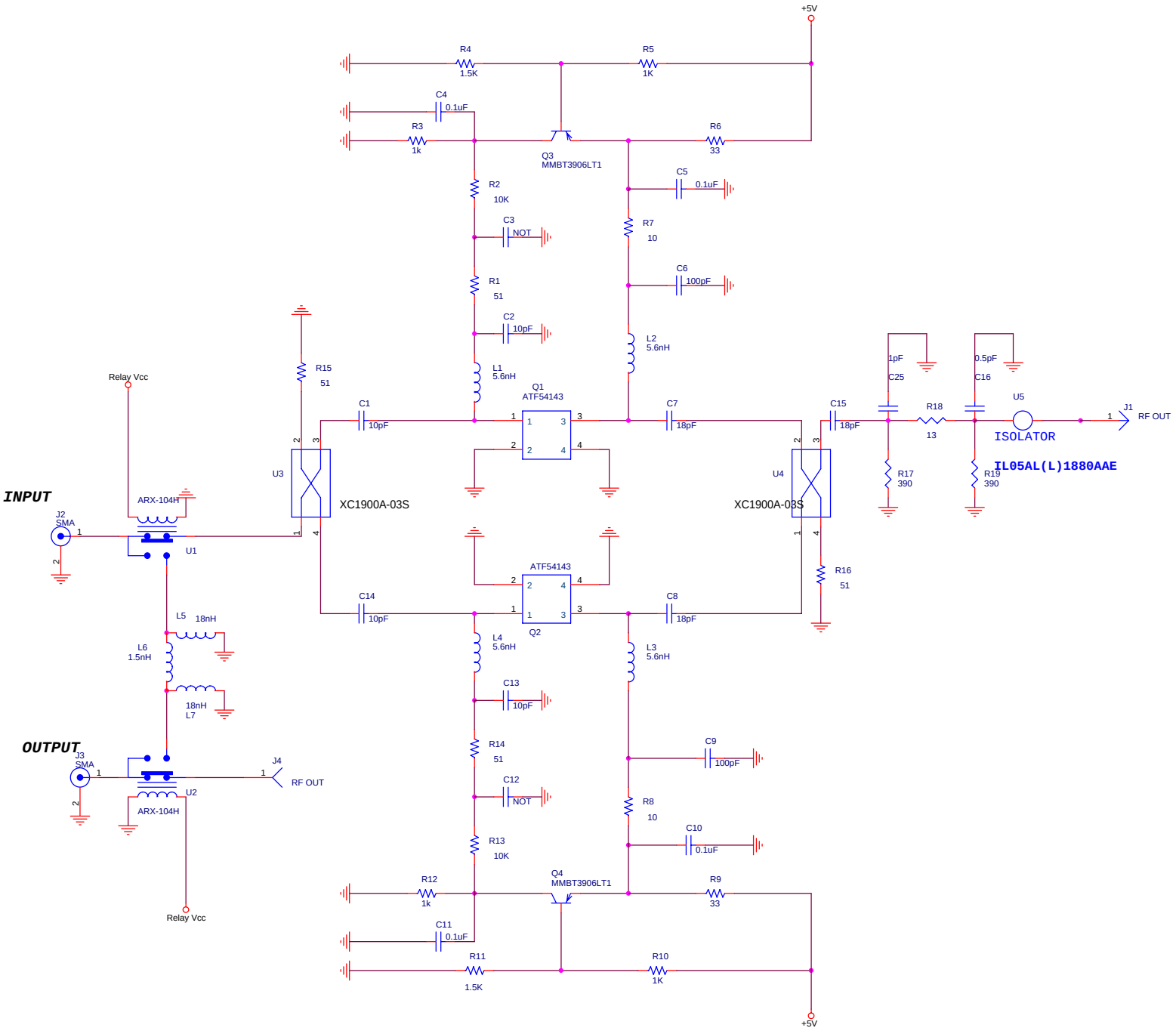
+5V
R4
1.5K
R5
1K
C4
0.1uF
R3
1k
Q3
MMBT3906LT1
R6
33
R2
10K
C5
0.1uF
C3
NOT
R7
10
R1
51
C6
100pF
C2
10pF
L2
5.6nH
L1
5.6nH
Q1
ATF54143
R15
51
Relay Vcc
C1
10pF
C7
18pF
C15
18pF
1pF
C25
R18
13
0.5pF
C16
U5
J1
RF OUT
ISOLATOR
IL05AL(L)1880AAE
U3
XC1900A-03S
U4
XC1900A-03S
R17
390
R19
390
INPUT
J2
SMA
ARX-104H
U1
ATF54143
Q2
R16
51
C14
10pF
C8
18pF
L5
18nH
L6
1.5nH
L4
5.6nH
L3
5.6nH
18nH
L7
C13
10pF
OUTPUT
J3
SMA
J4
RF OUT
U2
ARX-104H
R14
51
C9
100pF
C12
NOT
R8
10
C10
0.1uF
R13
10K
R12
1k
Q4
MMBT3906LT1
R9
33
Relay Vcc
C11
0.1uF
R11
1.5K
R10
1K
+5V