Label:

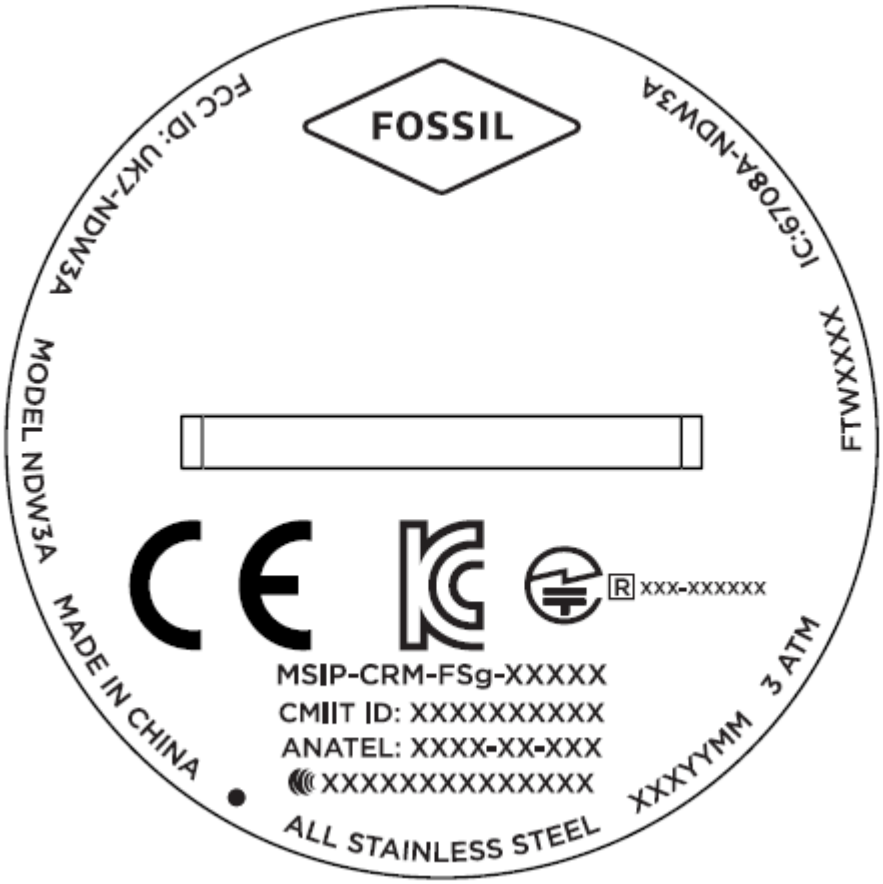
FOSSIL
FCC ID: UK7-NDW3A
IC:6708A-NDW3A
MODEL NDW3A
FTWXXXX
MADE IN CHINA
3 ATM
XXXYYMM
ALL STAINLESS STEEL
R XXX-XXXXXX
MSIP-CRM-FSg-XXXXX
CMIIT ID: XXXXXXXXXX
ANATEL: XXXX-XX-XXX
XXXXXXXXXXXXX

SKAGEN
HYBRID
FCC ID: UK7-NDW3A
IC: 6708A-NDW3A
SKTXXXX
JORN
3 ATM
XXXYYMM
ALL STAINLESS STEEL
MADE IN CHINA
MODEL NDW3B
MSIP-CRM-FSg-XXXXX
XXX-XXXXXX

VER2

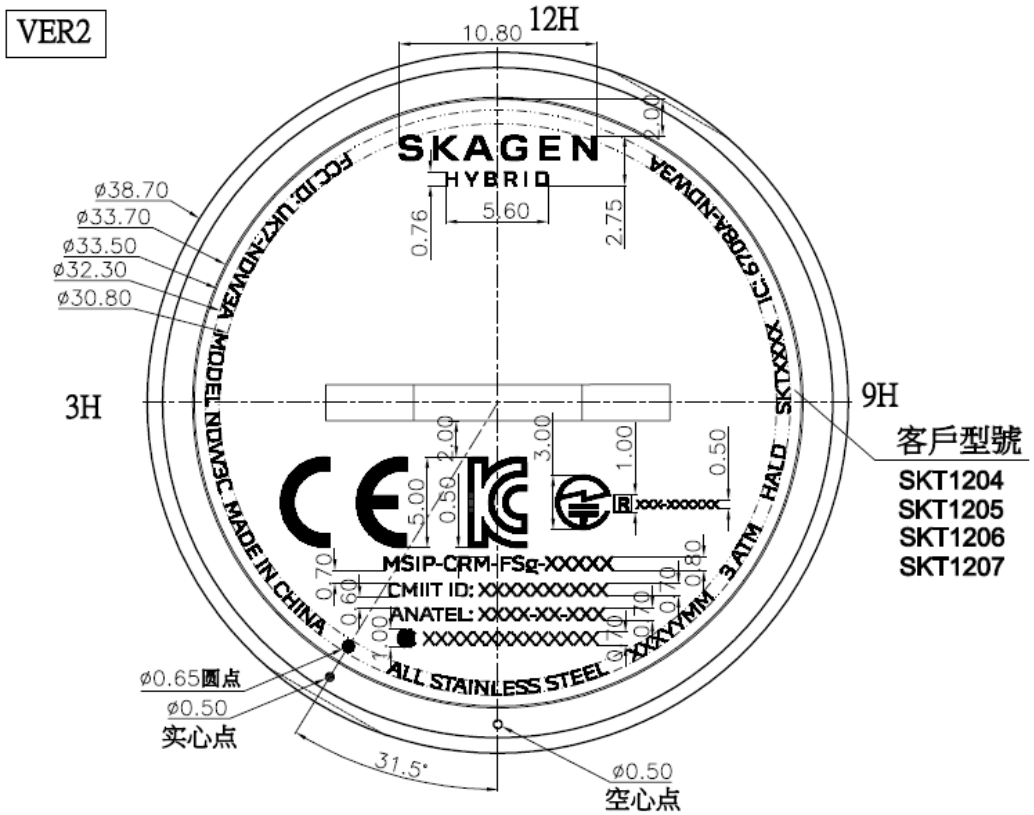
12H
10.80
2.00
SKAGEN
HYBRID
5.60
0.76
2.75
ø38.70
ø33.70
ø33.50
ø32.30
ø30.80
3H
9H
客戶型號
SKT1204
SKT1205
SKT1206
SKT1207
2.00
3.00
1.00
0.50
5.00
0.50
0.70
0.60
1.00
0.80
0.70
0.70
0.70
MSIP-CRM-FSg-XXXXX
CMIIT ID: XXXXXXXXXX
ANATEL: XXXX-XX-XXX
XXXXXXXXXXXXXX
ø0.65圓点
ø0.50
实心点
31.5°
ø0.50
空心点

Label is on the back of the watch.