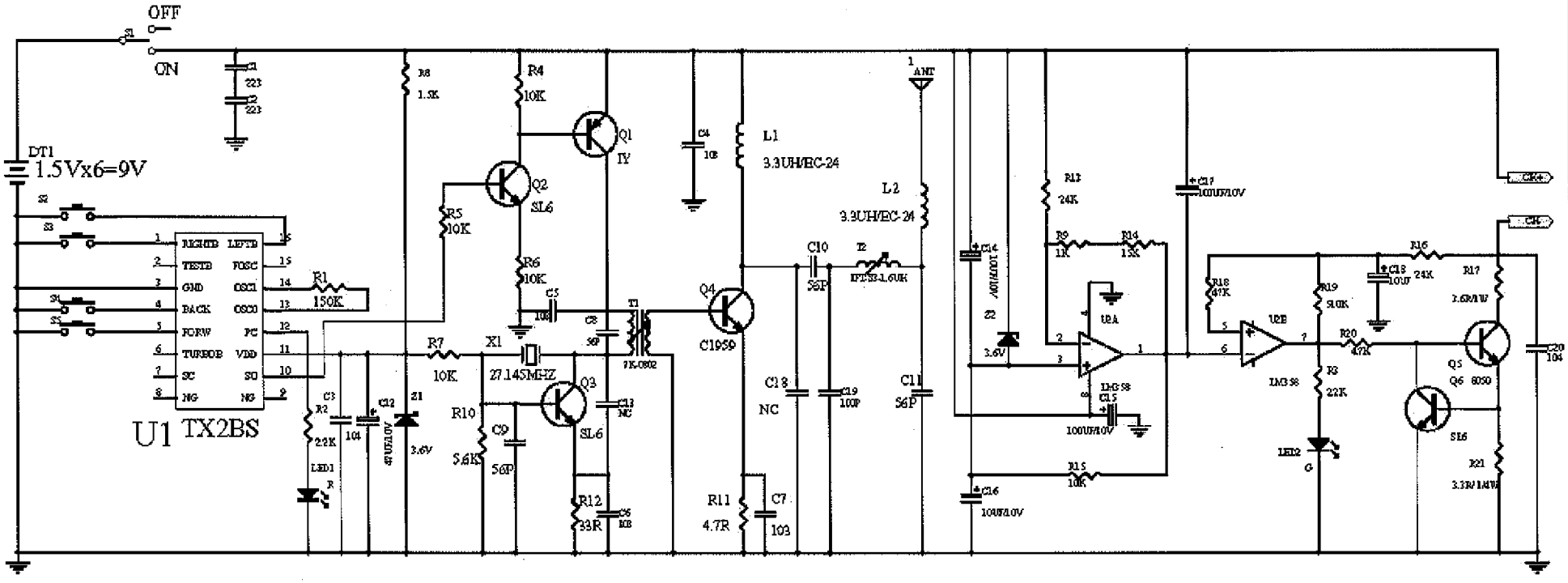

FILE NAME:	TX circuit diagram	VERSION:	1	FILE NO:		APPROVED BY:	
PRODUCT NO:		PAGE:	1OF1	PREPARED BY:		DATE:	
Company name:	Dynamic Industries Co. Ltd.						