PDF created with pdfFactory trial version www.pdffactory.com

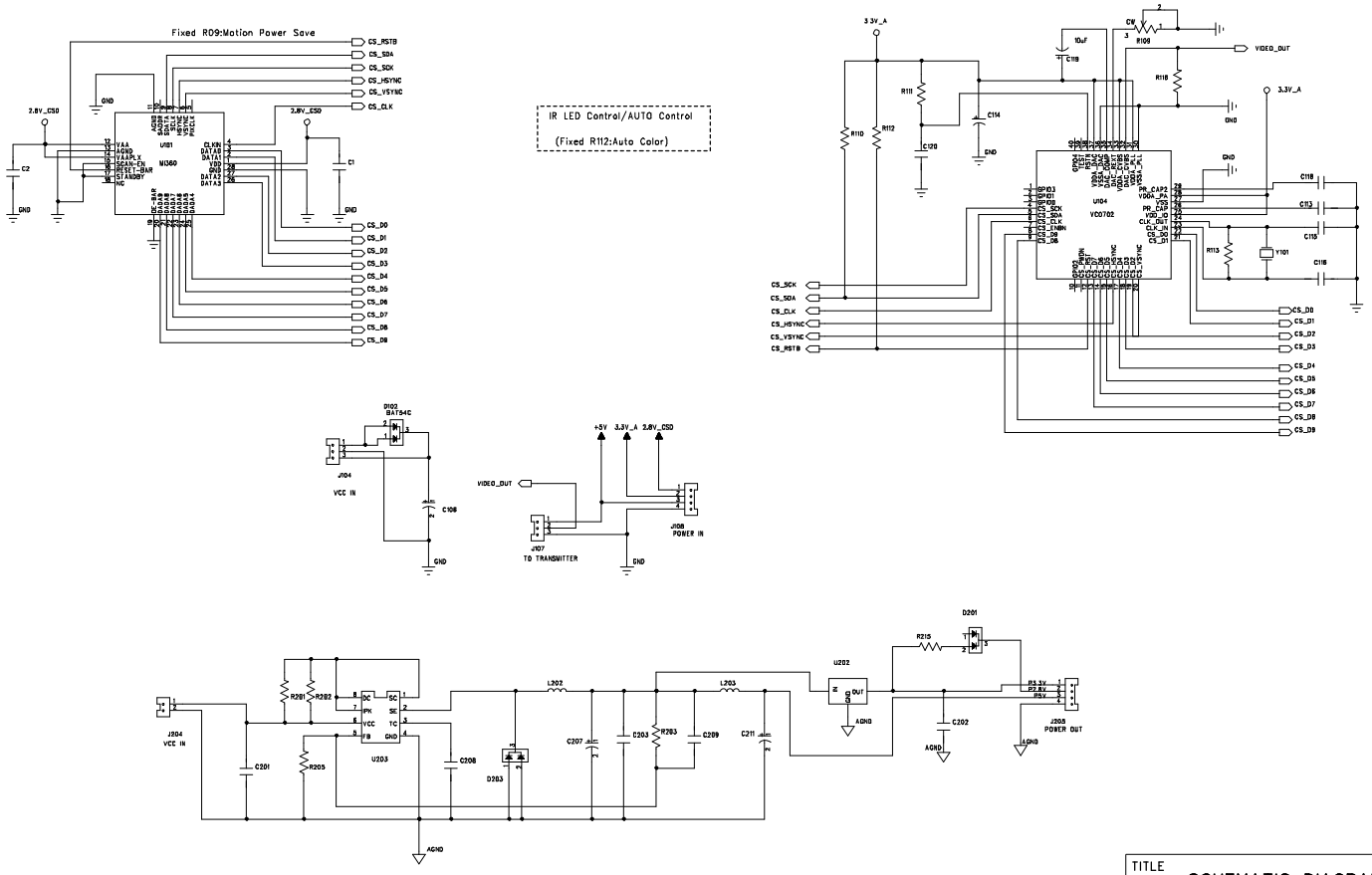

REVISION	DESCRIPTION	ISSUED DATE
B	Second Released	06/08/07
A	First Released	06/06/27

TITLE	SCHEMATIC DIAGRAM
DOC. NO	
MODEL NO.:GP860	DRWN Alex_san
CAD REF:00	CHKD
PAGE 1 OF 1	APPD