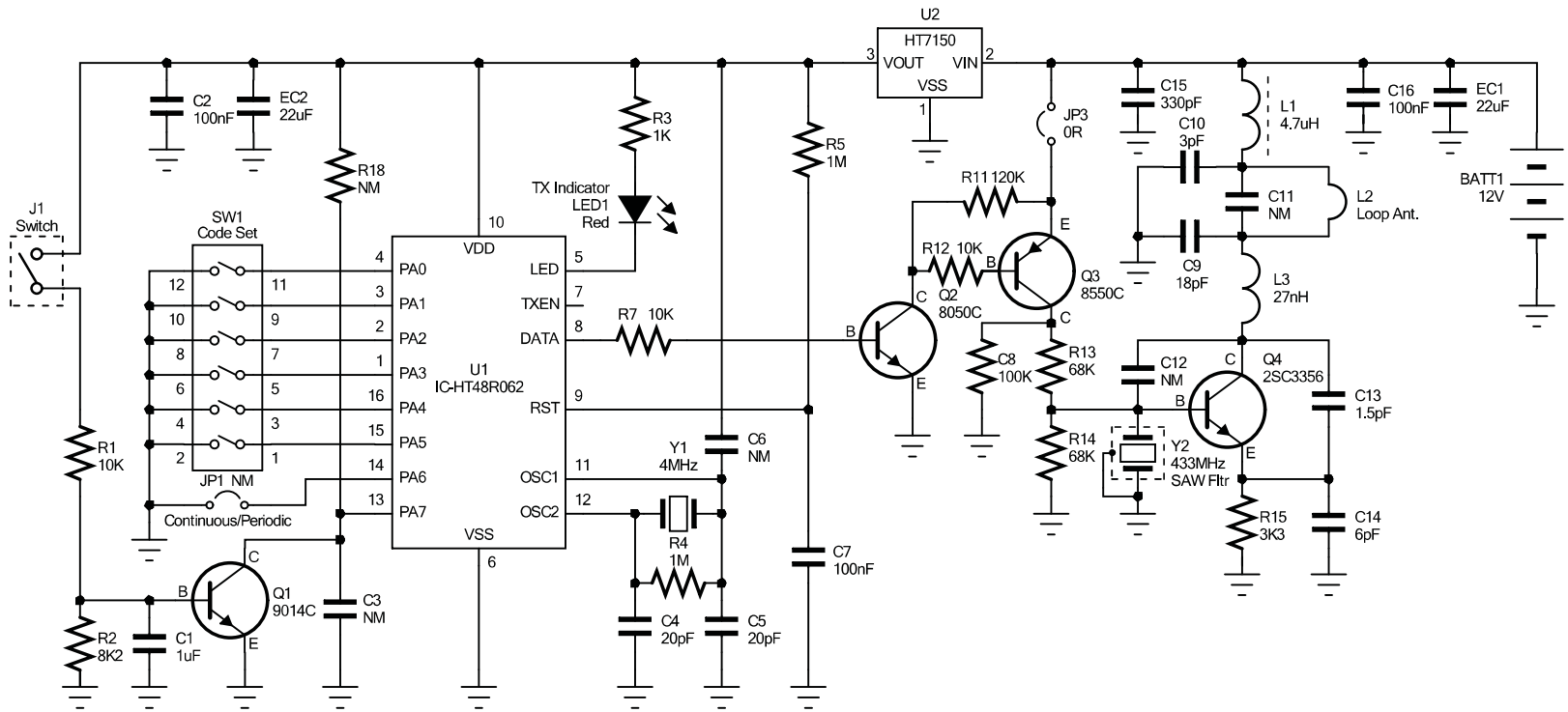

Kolf Industries (H.K.) Ltd.		
FILE NAME:	MODEL: TX/RX	
PCB FILE:	TITLE: Transmission Unit	
DRAWN BY:		
APPROVED BY:	PART NO.:	
DATE: 11-Jan-2010	SHEET 2 OF 2	REV.: 1