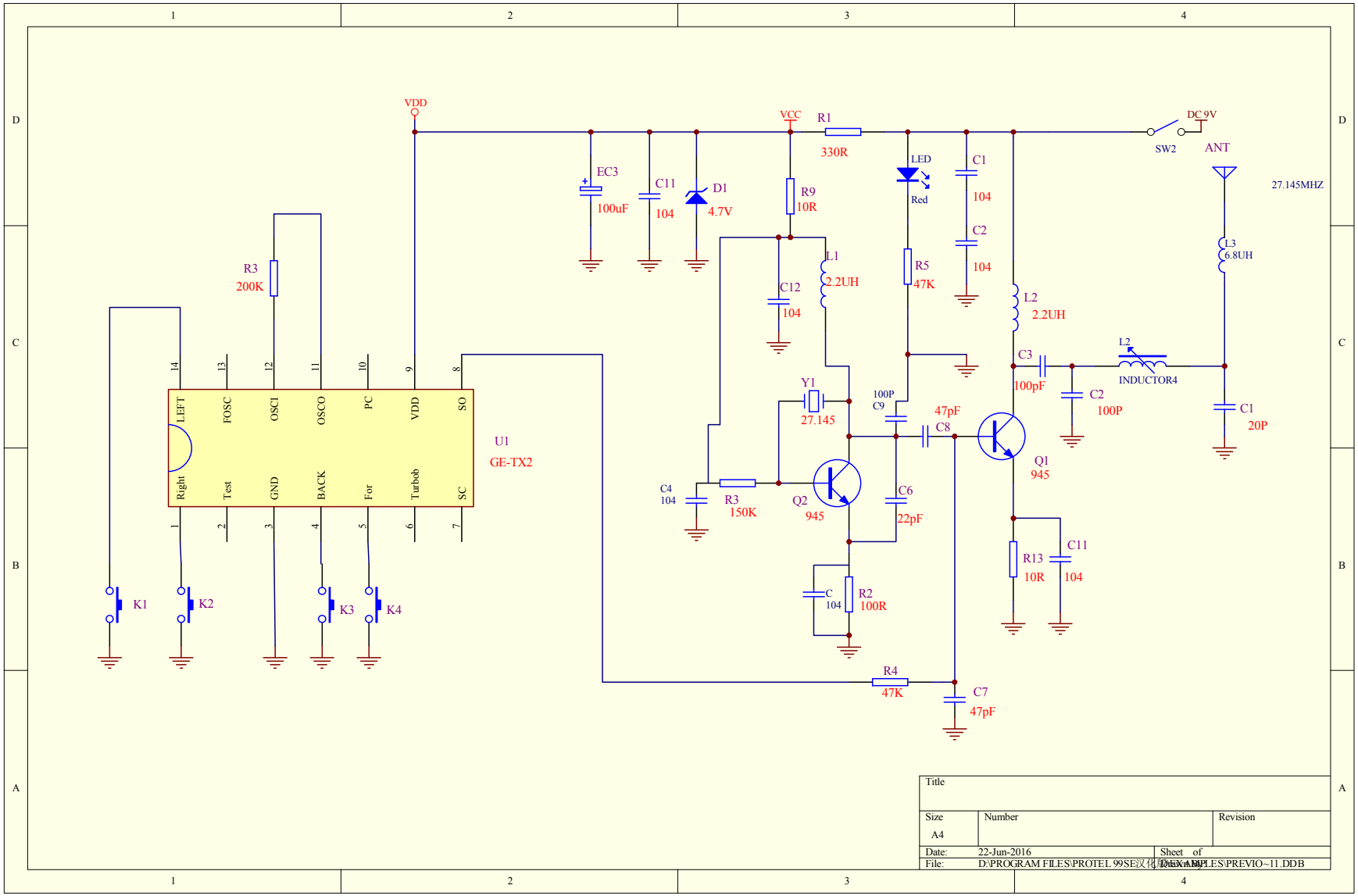
VDD
VCC
R1
330R
DC 9V
SW2
ANT
27.145MHZ
EC3
100uF
C11
104
D1
4.7V
R9
10R
LED
Red
C1
104
C2
104
L3
6.8UH
R3
200K
L1
2.2UH
C12
104
R5
47K
L2
2.2UH
C3
100pF
L2
INDUCTOR4
C2
100P
C1
20P
Y1
27.145
100P
C9
47pF
C8
Q1
945
U1
GE-TX2
LEFT
FOSC
OSCI
OSCO
PC
VDD
SO
Right
Test
GND
BACK
For
Turbob
SC
C4
104
R3
150K
Q2
945
C6
22pF
C11
R13
10R
104
C
104
R2
100R
K1
K2
K3
K4
R4
47K
C7
47pF
Title
Size
A4
Number
Revision
Date:
22-Jun-2016
Sheet of
File:
D:\PROGRAM FILES\PROTEL 99SE汉化版\EXAMPLES\PREVIO~11.DDB