REVISIONS						
REV.	FAB CAD FILE	NATIVE DRAWING FILE	NATIVE CAD FILE	DESCRIPTION	DATE	APPROVED
A	88-1231-001-A.PDF	88-1231-001-A.SLDDRW	99-1156-001-A.SLDASM	INITIAL PROTOTYPE RELEASE.	12/17/2013	KD/LB

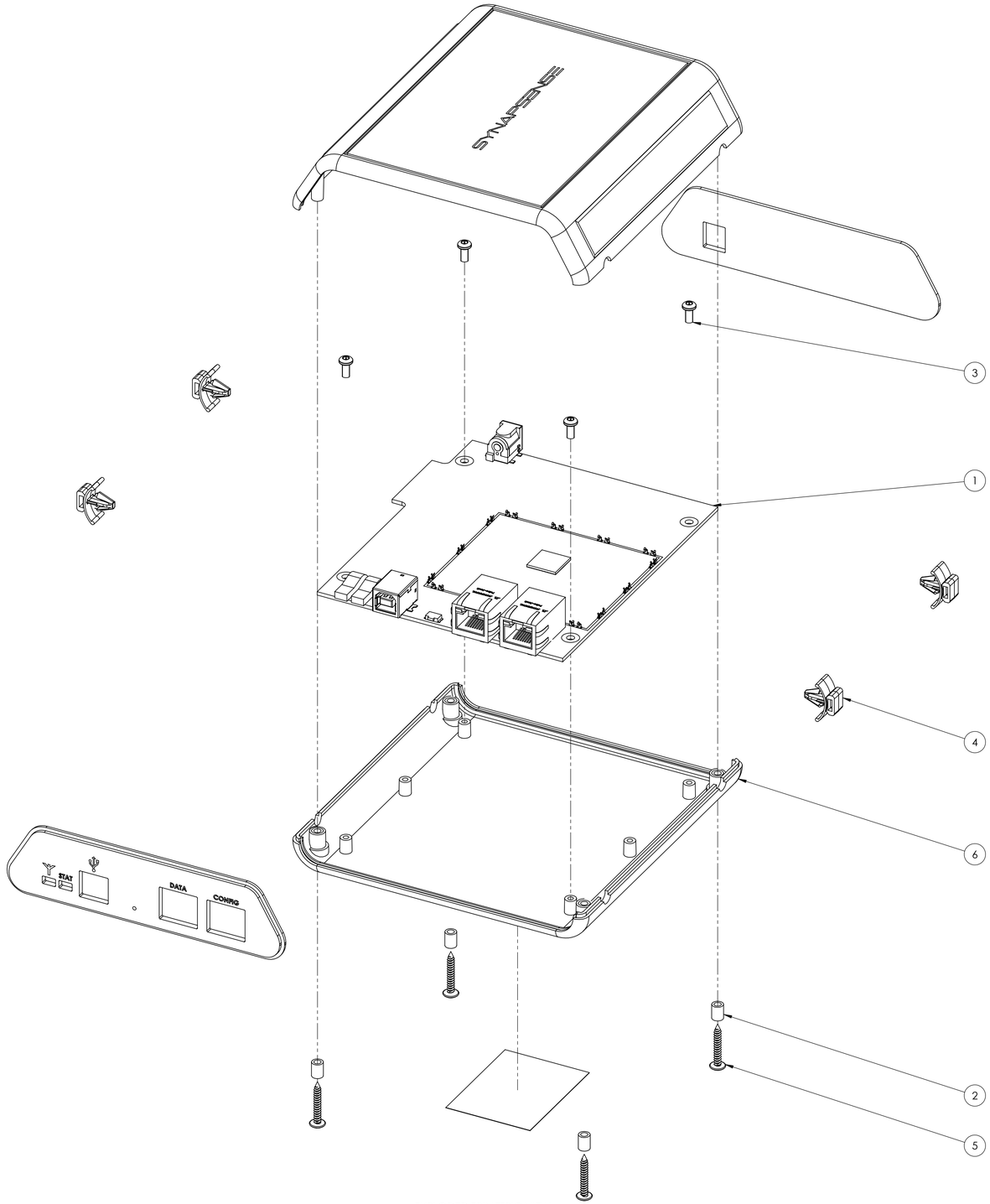

EXPLODED TRIMETRIC VIEW

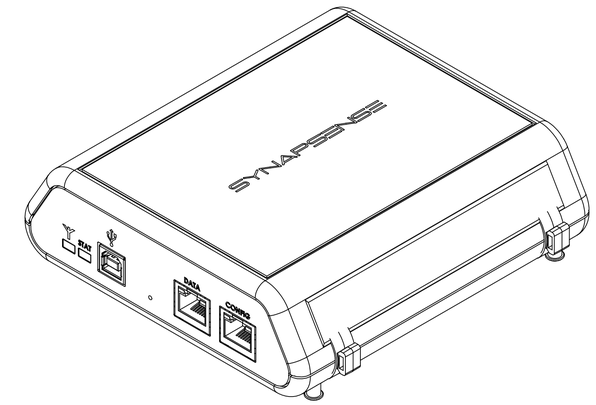

ISOMETRIC VIEW

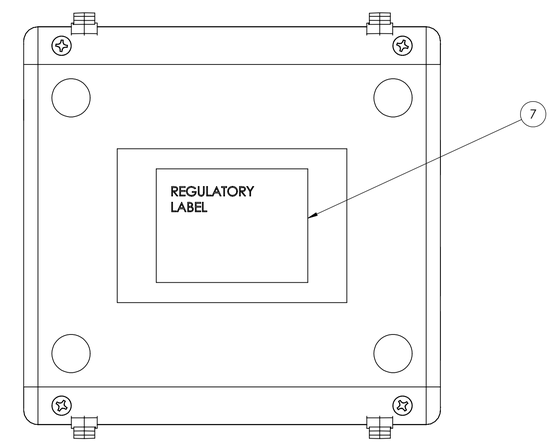

BOTTOM VIEW

ITEM NO.	DESCRIPTION	QTY.
1	PCBA, YODA	1
2	NYLON UNTHREADED SPACER, 3-16" OD, 1/4" LENGTH, #4 SCREW SIZE	4
3	SCREW, 4-20 X 1/4" PAN HEAD, ZINC PLATED STEEL, T10 DRIVE (RoHS COMP)	4
4	CLIP, ZIP TIE MOUNTING, PANEL MOUNT, BLACK (RoHS)	4
5	SCREW, LARGE DIAMETER PAN HEAD, #4 X 3/4" SHEET METAL (RoHS)	4
6	CASE, YODA	1
7	LABEL, PRINTED, REGULATORY/MODEL NUMBER, 2X1.5" (ROHS COMP)	1

THIRD ANGLE PROJECTION

PROPRIETARY AND CONFIDENTIAL
THE INFORMATION CONTAINED IN THIS DRAWING IS THE SOLE PROPERTY OF SYNAPSENSE CORPORATION. ANY REPRODUCTION IN PART OR AS A WHOLE WITHOUT THE WRITTEN PERMISSION OF SYNAPSENSE CORPORATION IS PROHIBITED.

CUSTOMER: Synapsense	DRAWN BY: K. Dills	DATE: 12/17/13	TITLE: ASSEMBLY DRAWING, YODA
PROGRAM NAME: YODA	ENGINEER: K. Dills	DATE: 12/17/13	
NEXT ASSEMBLY	CHECKED: D. Tostenson	DATE: 12/17/13	DWG. NO. 88-1231-001
TOLERANCES: See Notes	APPROVED: L. Brown	DATE: 12/17/13	SCALE: 1:1 WEIGHT: SHEET 1 OF 1

SYNAPSENSE
340 Palladio Pkwy, Suite 540
Folsom, CA 95630
Tel. 916 294-0110
Fax 916 294-0270
www.synapsense.com

SIZE D **REVISION A**