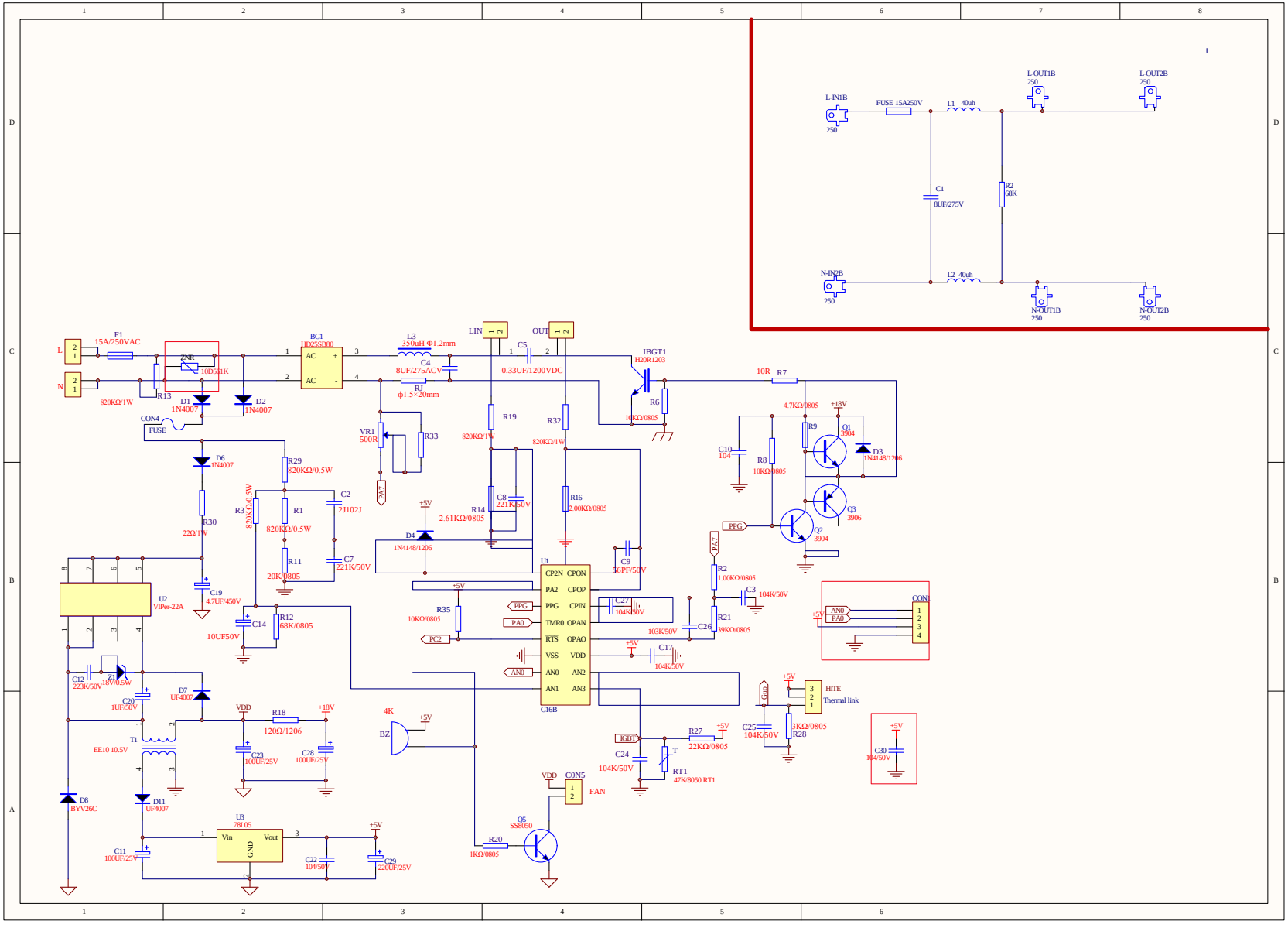
L-IN1B
250
FUSE 15A250V
L1 40uh
L-OUT1B
250
L-OUT2B
250
C1
8UF/275V
R2
68K
N-IN2B
250
L2 40uh
N-OUT1B
250
N-OUT2B
250
L
N
F1
15A/250VAC
R13
820KΩ/1W
ZNR
10D561K
D1
1N4007
D2
1N4007
CON4
FUSE
BG1
HD25SB80
AC
AC
L3
350uH Φ1.2mm
C4
8UF/275ACV
RJ
φ1.5×20mm
LIN
OUT
C5
0.33UF/1200VDC
IBGT1
H20R1203
R6
10KΩ/0805
10R R7
4.7KΩ/0805
+18V
R9
Q1
3904
D3
1N4148/1206
C10
104
R8
10KΩ/0805
Q3
3906
Q2
3904
PPG
PA7
R2
1.00KΩ/0805
C3
104K/50V
R21
39KΩ/0805
C26
103K/50V
C17
104K/50V
+5V
AN0
PA0
CON1
1
2
3
4
VR1
500R
R33
PA7
R19
820KΩ/1W
R32
820KΩ/1W
C8
221K/50V
R14
2.61KΩ/0805
R16
2.00KΩ/0805
D4
1N4148/1206
C9
16PF/50V
C27
104K/50V
R35
10KΩ/0805
PC2
PPG
PA0
AN0
U1
CP2N
CPON
PA2
CPOP
PPG
CPIN
TMR0
OPAN
RTS
OPAO
VSS
VDD
AN0
AN2
AN1
AN3
G16B
D6
1N4007
R29
820KΩ/0.5W
R3
820KΩ/0.5W
R1
820KΩ/0.5W
C2
2J102J
R11
20K/0805
C7
221K/50V
R30
22Ω/1W
C19
4.7UF/450V
C14
10UF50V
R12
68K/0805
U2
VIPer-22A
C12
223K/50V
Z1
18V/0.5W
C20
1UF/50V
D7
UF4007
T1
EE10 10.5V
VDD
R18
120Ω/1206
+18V
C23
100UF/25V
C28
100UF/25V
D8
BYV26C
D11
UF4007
U3
78L05
Vin
Vout
GND
C11
100UF/25V
C22
104/50V
C29
220UF/25V
4K
BZ
IGBT
C24
104K/50V
R27
22KΩ/0805
T
RT1
47K/8050 RT1
VDD
CON5
FAN
Q5
SS8050
R20
1KΩ/0805
Gain
HITE
Thermal link
C25
104K/50V
R28
3KΩ/0805
C30
104/50V

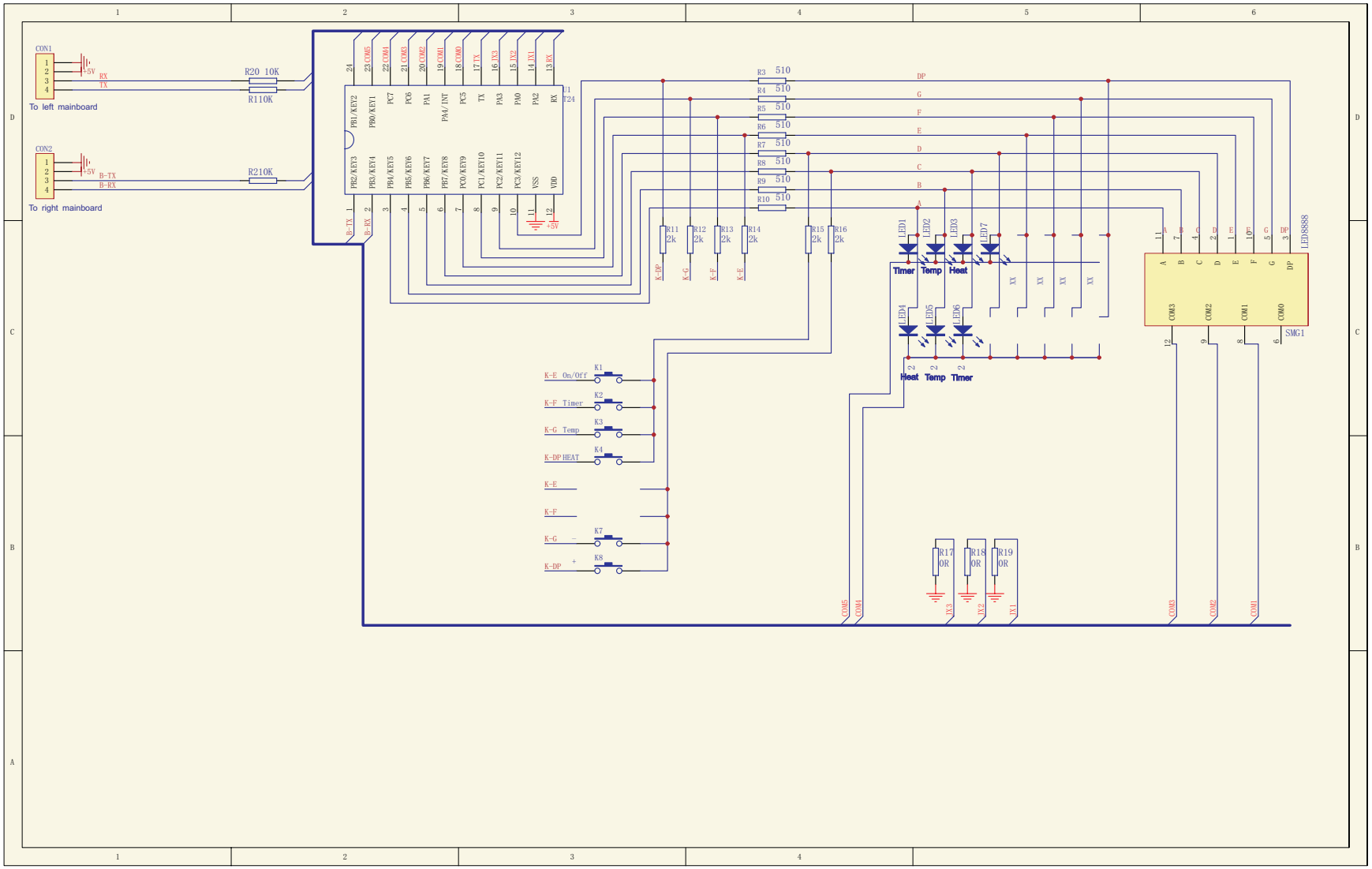
CON1
+5V
RX
TX
To left mainboard
CON2
B-TX
B-RX
To right mainboard
R20 10K
R110K
R210K
U1
T24
PB1/KEY2
PB0/KEY1
PC7
PC6
PA1
PA4/INT
PC5
TX
PA3
PA0
PA2
RX
PB2/KEY3
PB3/KEY4
PB4/KEY5
PB5/KEY6
PB6/KEY7
PB7/KEY8
PC0/KEY9
PC1/KEY10
PC2/KEY11
PC3/KEY12
VSS
VDD
COM5
COM4
COM3
COM2
COM1
COM0
TX3
TX2
TX1
R3 510
R4 510
R5 510
R6 510
R7 510
R8 510
R9 510
R10 510
R11 2k
R12 2k
R13 2k
R14 2k
R15 2k
R16 2k
K-DP
K-G
K-F
K-E
DP
G
F
E
D
C
B
A
LED1
LED2
LED3
LED7
LED4
LED5
LED6
Timer
Temp
Heat
XX
SMG1
LED8888
K-E On/Off
K-F Timer
K-G Temp
K-DP HEAT
K1
K2
K3
K4
K7
K8
R17 0R
R18 0R
R19 0R

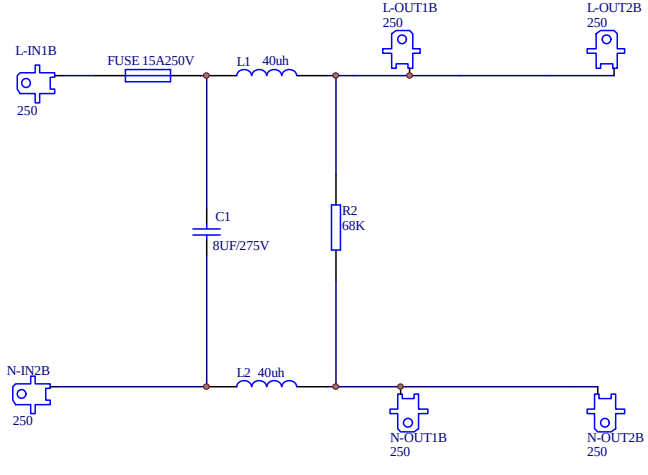
L-IN1B
250
FUSE 15A250V
L1 40uh
L-OUT1B
250
L-OUT2B
250
C1
8UF/275V
R2
68K
N-IN2B
250
L2 40uh
N-OUT1B
250
N-OUT2B
250

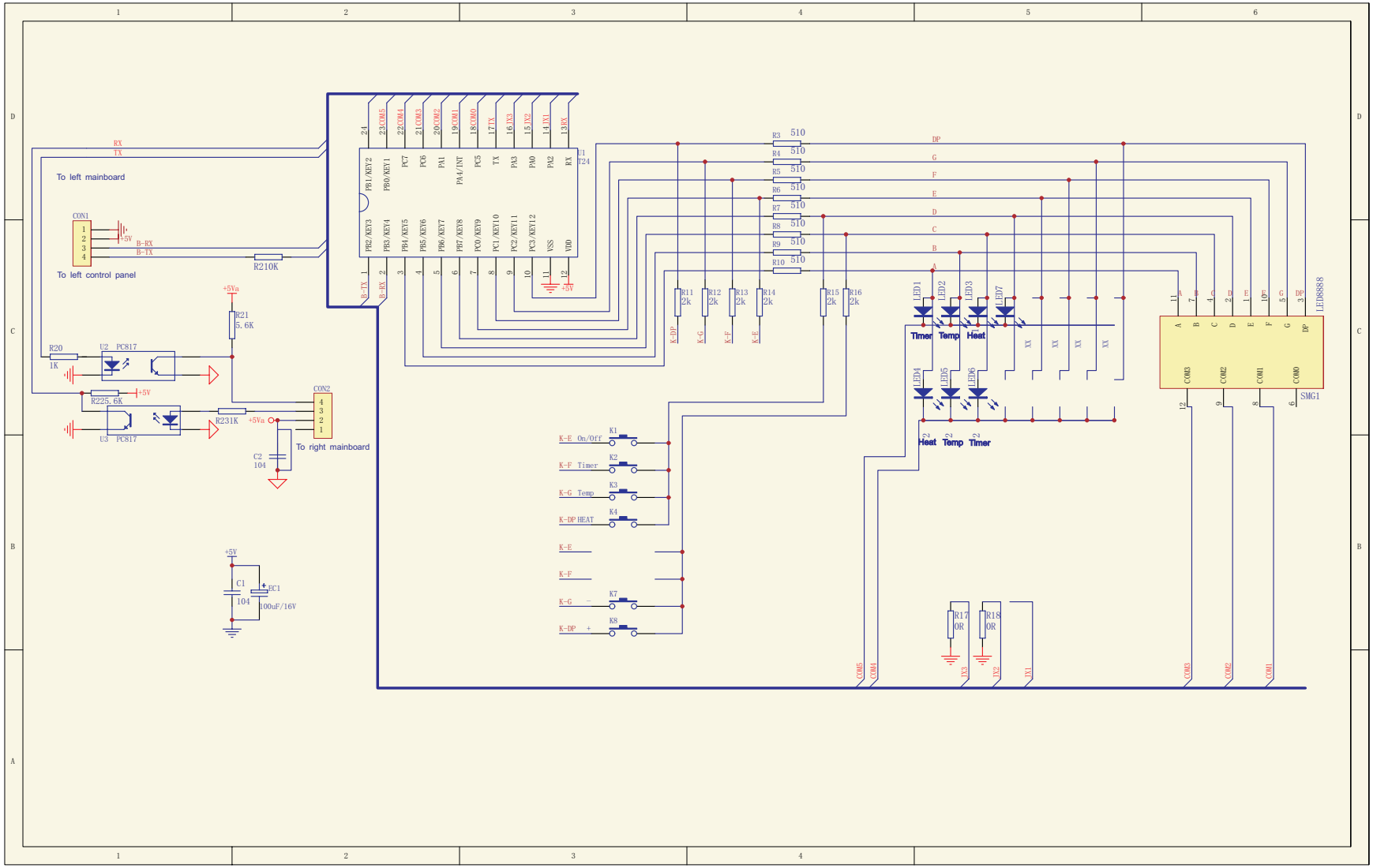
To left mainboard
To left control panel
To right mainboard
CON1
CON2
R210K
R21 5.6K
R20 1K
R225 6K
R231K
U2 PC817
U3 PC817
C2 104
C1 104
EC1 100uF/16V
+5Va
+5V
B-RX
B-TX
RX
TX
U1 T24
R3 510
R4 510
R5 510
R6 510
R7 510
R8 510
R9 510
R10 510
R11 2k
R12 2k
R13 2k
R14 2k
R15 2k
R16 2k
LED1
LED2
LED3
LED7
LED4
LED5
LED6
Timer
Temp
Heat
K-E On/Off
K-F Timer
K-G Temp
K-DP HEAT
K-E
K-F
K-G
K-DP
K1
K2
K3
K4
K7
K8
R17 0R
R18 0R
LED8888
SMG1
COM5
COM4
COM3
COM2
COM1
COM0