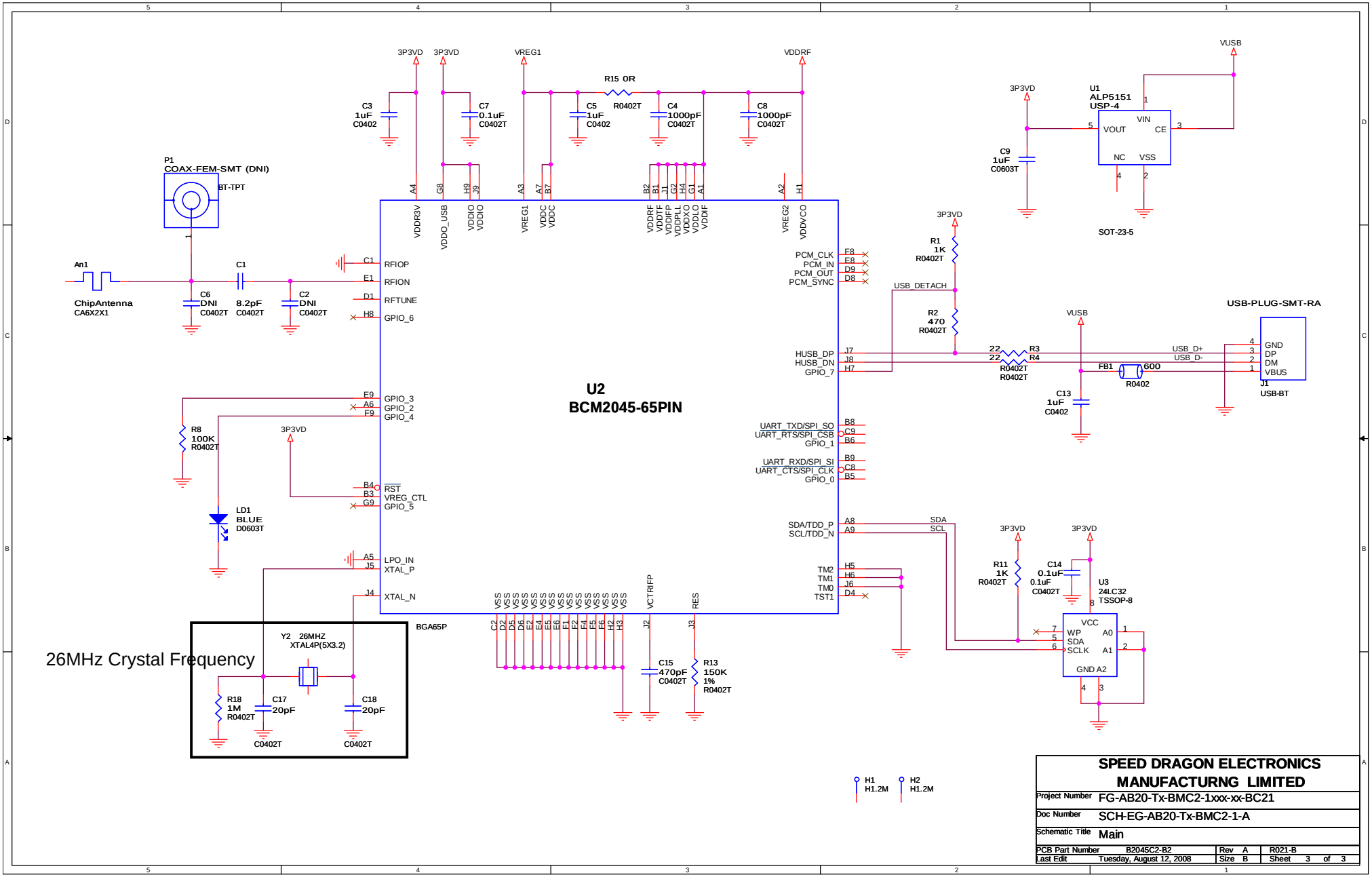
U2
BCM2045-65PIN
BGA65P
P1
COAX-FEM-SMT (DNI)
BT-TPT
An1
ChipAntenna
CA6X2X1
C1
8.2pF
C0402T
C6
DNI
C0402T
C2
DNI
C0402T
3P3VD
VREG1
VDDRF
VUSB
R15 0R
R0402T
C3
1uF
C0402
C7
0.1uF
C0402T
C5
1uF
C0402
C4
1000pF
C0402T
C8
1000pF
C0402T
U1
ALP5151
USP-4
VIN
VOUT
CE
NC
VSS
SOT-23-5
C9
1uF
C0603T
R1
1K
R0402T
R2
470
R0402T
USB_DETACH
HUSB_DP
HUSB_DN
GPIO_7
R3
R4
22
22
R0402T
R0402T
FB1
600
R0402
C13
1uF
C0402
USB-PLUG-SMT-RA
GND
DP
DM
VBUS
J1
USB-BT
USB_D+
USB_D-
PCM_CLK
PCM_IN
PCM_OUT
PCM_SYNC
RFIOP
RFION
RFTUNE
GPIO_6
GPIO_3
GPIO_2
GPIO_4
RST
VREG_CTL
GPIO_5
LPO_IN
XTAL_P
XTAL_N
UART_TXD/SPI_SO
UART_RTS/SPI_CSB
GPIO_1
UART_RXD/SPI_SI
UART_CTS/SPI_CLK
GPIO_0
SDA/TDD_P
SCL/TDD_N
SDA
SCL
TM2
TM1
TM0
TST1
VCTRIFP
RES
R8
100K
R0402T
LD1
BLUE
D0603T
26MHz Crystal Frequency
Y2 26MHZ
XTAL4P(5X3.2)
R18
1M
R0402T
C17
20pF
C0402T
C18
20pF
C0402T
C15
470pF
C0402T
R13
150K
1%
R0402T
R11
1K
R0402T
C14
0.1uF
C0402T
U3
24LC32
TSSOP-8
VCC
WP
SDA
SCLK
A0
A1
A2
GND
H1
H1.2M
H2
H1.2M
SPEED DRAGON ELECTRONICS
MANUFACTURNG LIMITED
Project Number FG-AB20-Tx-BMC2-1xxx-xx-BC21
Doc Number SCH-EG-AB20-Tx-BMC2-1-A
Schematic Title Main
PCB Part Number B2045C2-B2
Rev A
R021-B
Last Edit Tuesday, August 12, 2008
Size B
Sheet 3 of 3