REVISION RECORD			
LTR	ECO NO:	APPROVED:	DATE:

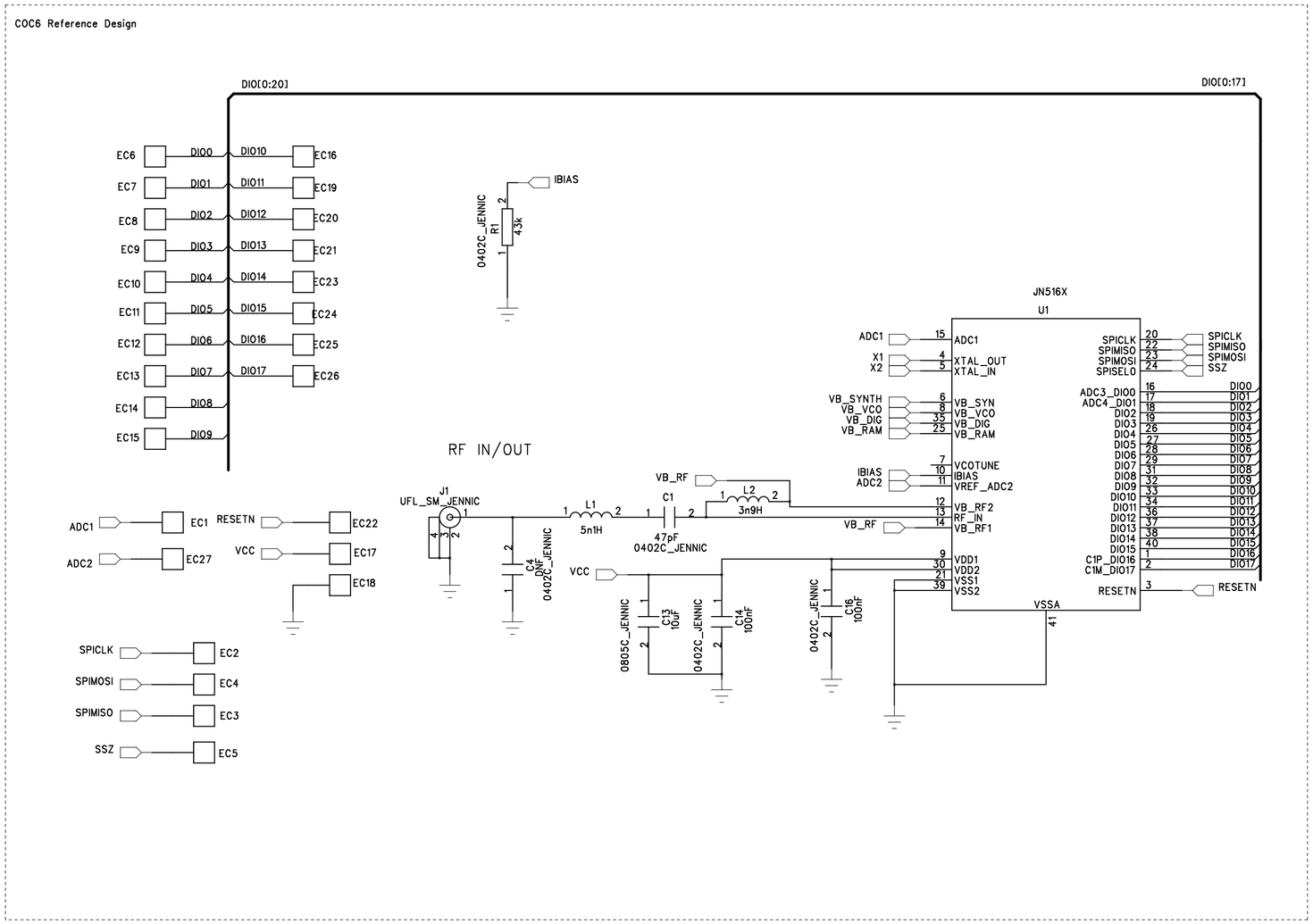

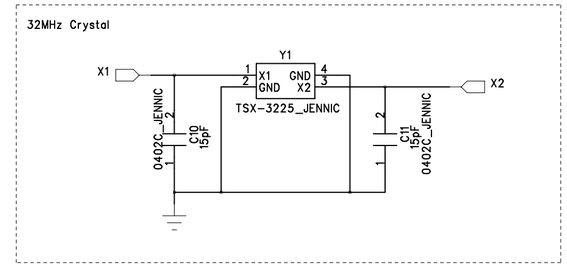

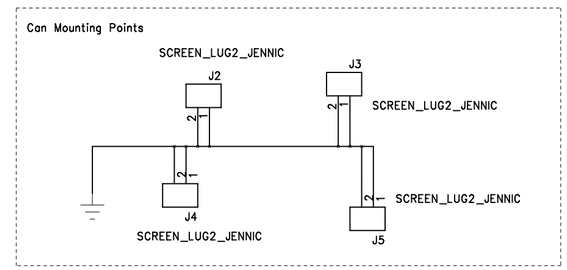

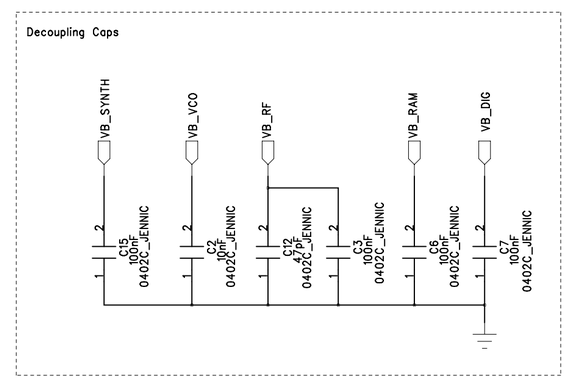

DRAWN: MDG	DATED: 21/11/11	COMPANY: NXP	
CHECKED: TM	DATED: 21/11/11	TITLE: JN5168 uFL Module	
QUALITY CONTROL:	DATED:	CODE:	SIZE:
RELEASED:	DATED:	DRAWING NO: DR1180	REV: 1V2
		SCALE:	SHEET: 1 OF 1