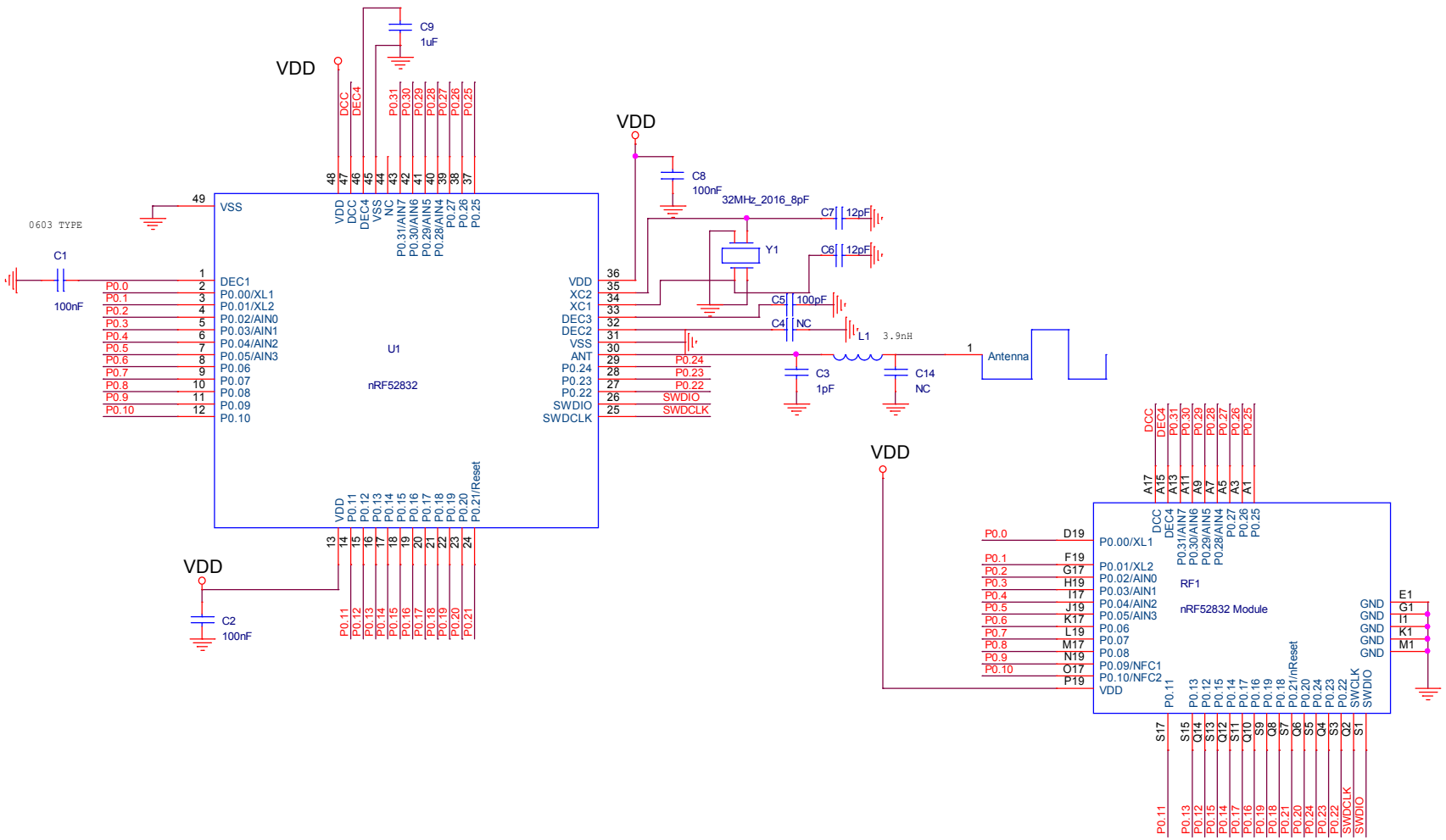

Title	TX-ANT		
Size B	Document Number <Doc>		Rev <RevCode>
Date: Wednesday, September 01, 2021	Sheet 1 of 1		