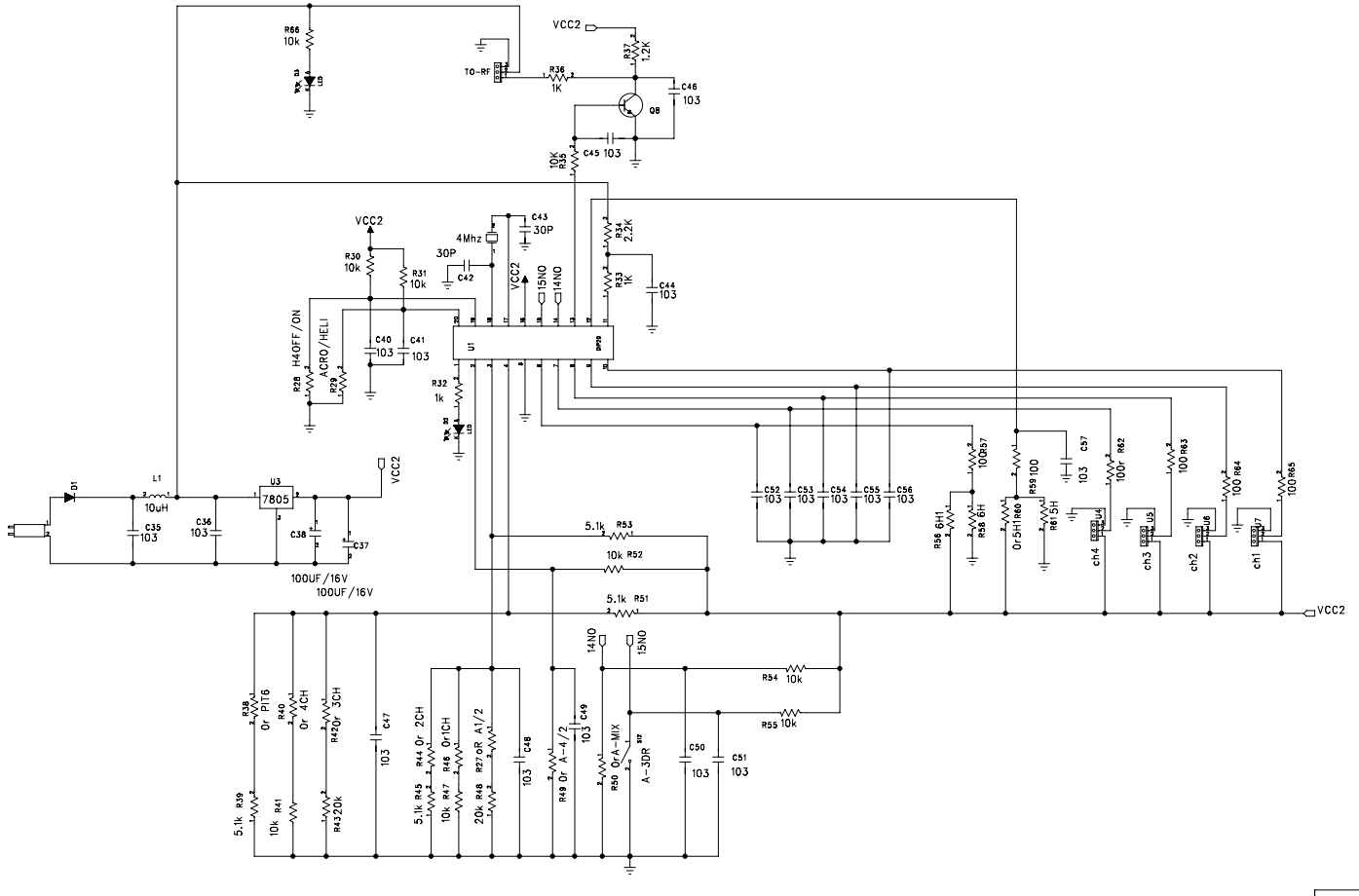


| REVISION RECORD | | | |
|---|---|---|---|
| LTR | ECO NO: | APPROVED: | DATE: |
| | | | |
| | | | |
| | | | |
| | | | |

| | | | |
|---|---|---|---|
| COMPANY: DYNAM | | | |
| TITLE: 3CH-encode | | | |
| DRAWN: yang.xiuyuan | DATED: 20060304 | | |
| CHECKED: yao.wenlao | DATED: 20060310 | CODE: | SIZE: A4 |
| QUALITY CONTROL: tang.chao | DATED: 20060315 | DRAWING NO: YF200625 | REV: 1.3 |
| RELEASED: jiang.tao | DATED: 20060320 | SCALE: 1:1 | SHEET: 1 OF 1 |