REVISION RECORD			
LTR	ECO NO:	APPROVED:	DATE:

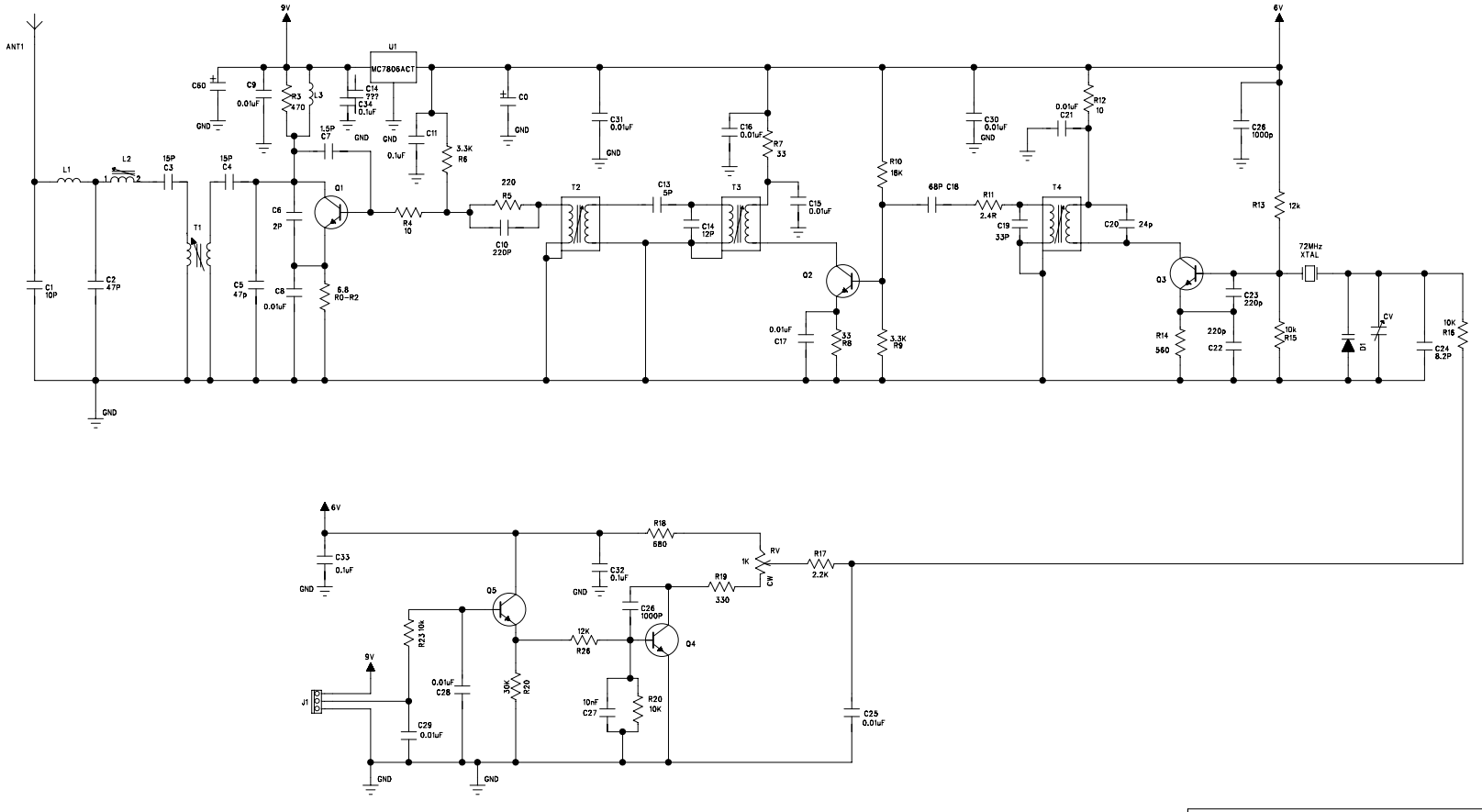

COMPANY: dynam					
TITLE: TX-72RF					
DRAWN: yang.xiuyuan	DATED: 20060425				
CHECKED: yao.wentao	DATED: 20060427	CODE:	SIZE: A2	DRAWING NO: YF200626	REV: 1.3
QUALITY CONTROL: tang.chao	DATED: 20060512				
RELEASED: jiang.tao	DATED: 20060527	SCALE:		SHEET: 1-1 OF	