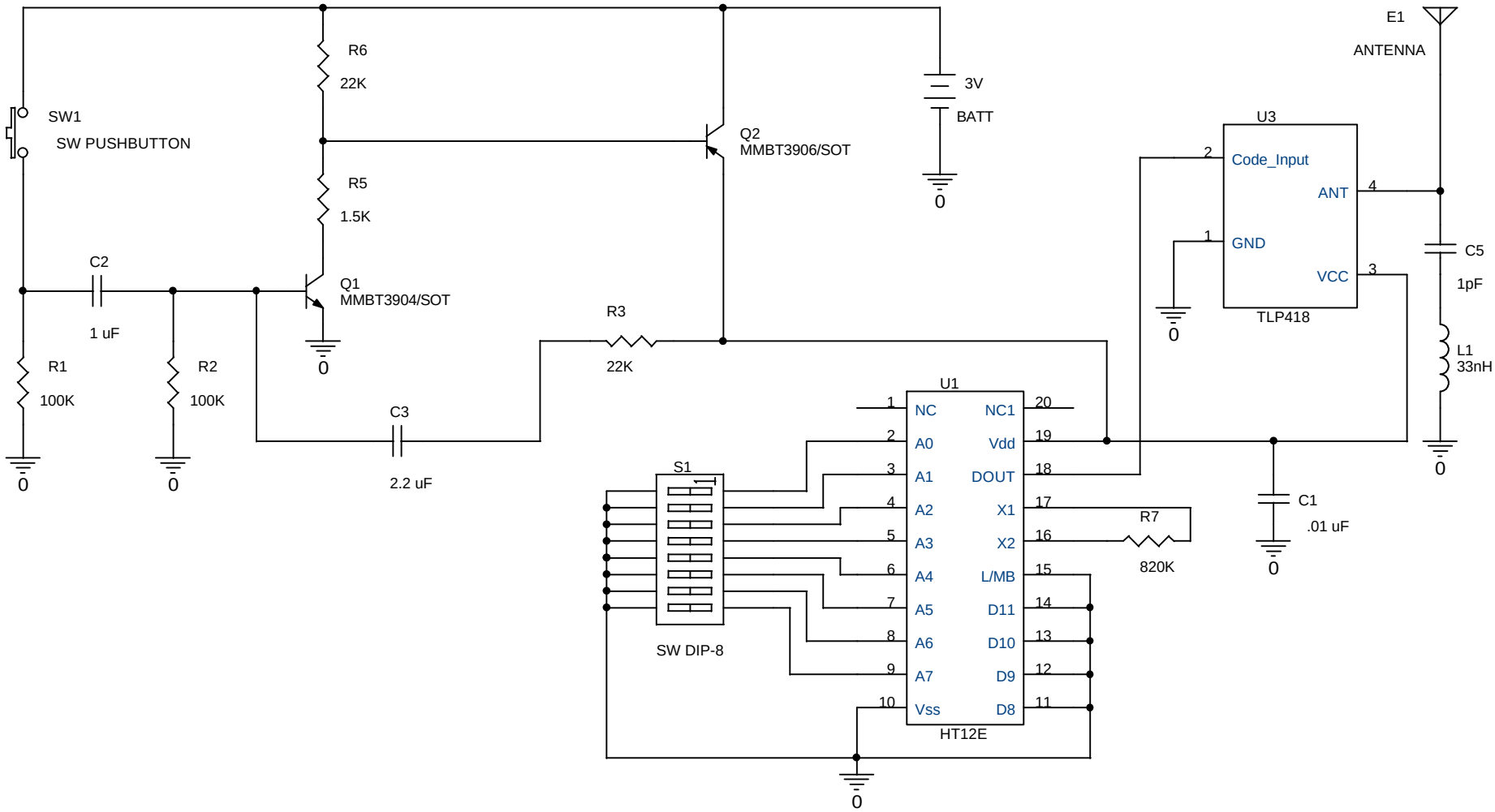

Signal Dynamics LLC.
446 Main St. West Townsend, Ma. 01474

Title: Model C3.5R RF Remote Control

Size	Document Number	Rev
A	001-0011-00	12

Date: Monday, July 11, 2005 Sheet 1 of 1