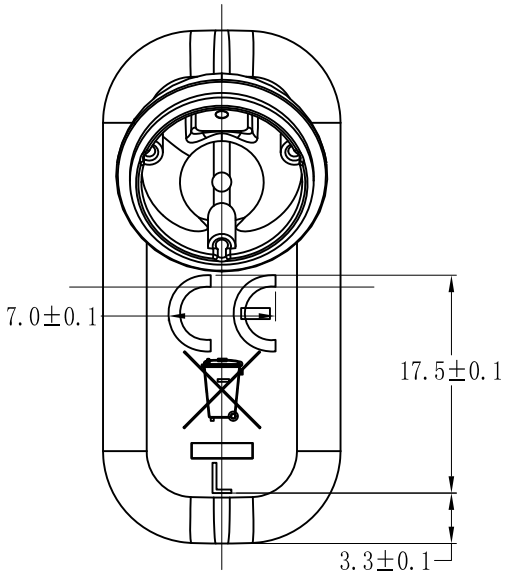
7.0±0.1
17.5±0.1
3.3±0.1
L

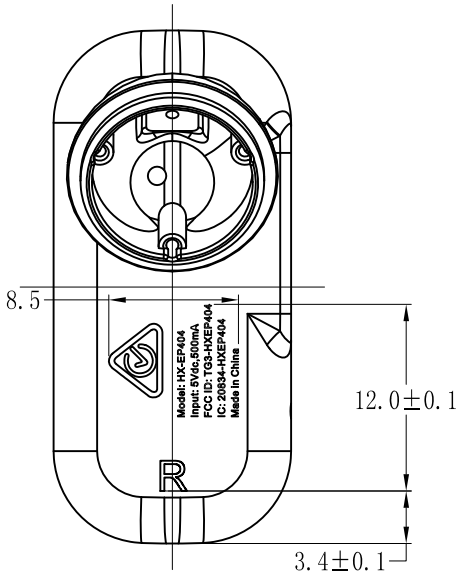
8.5
12.0±0.1
3.4±0.1
Model: HX-EP404
Input: 5Vdc,500mA
FCC ID: TG3-HXEP404
IC: 20834-HXEP404
Made in China
R