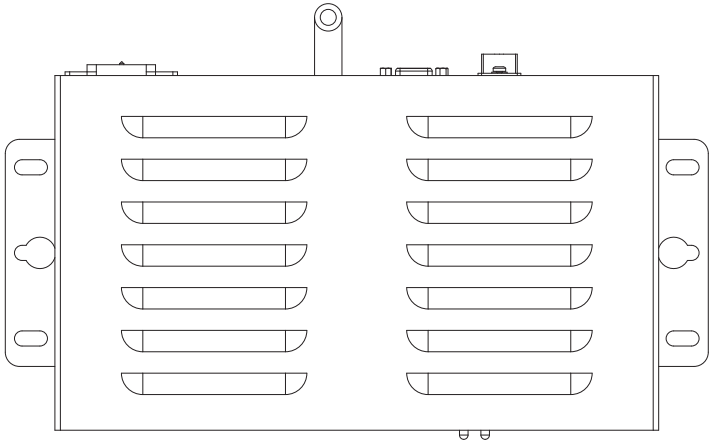

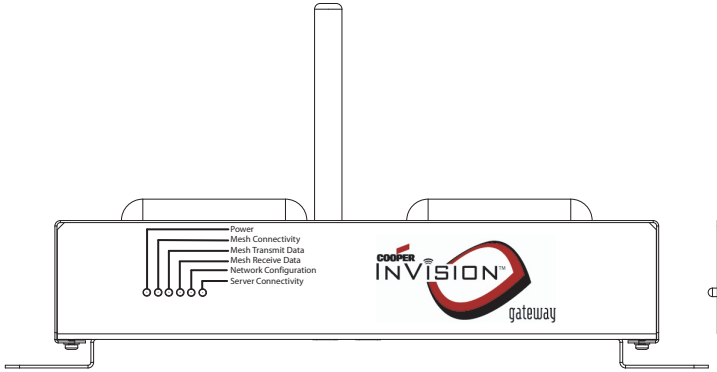
Power
Mesh Connectivity
Mesh Transmit Data
Mesh Receive Data
Network Configuration
Server Connectivity
COOPER
INVISION™
gateway

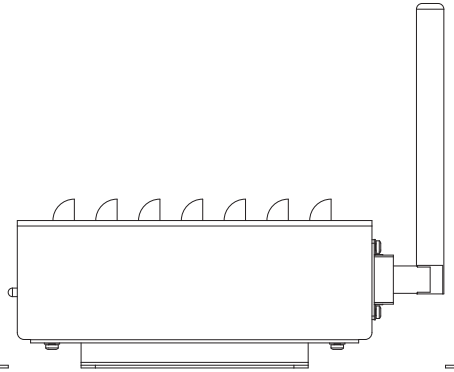

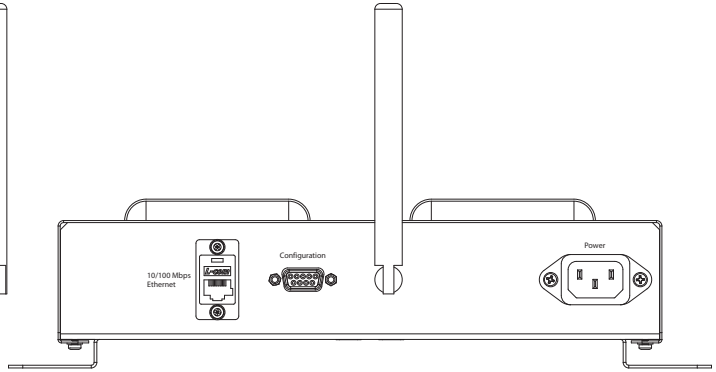
10/100 Mbps
Ethernet
Configuration
Power

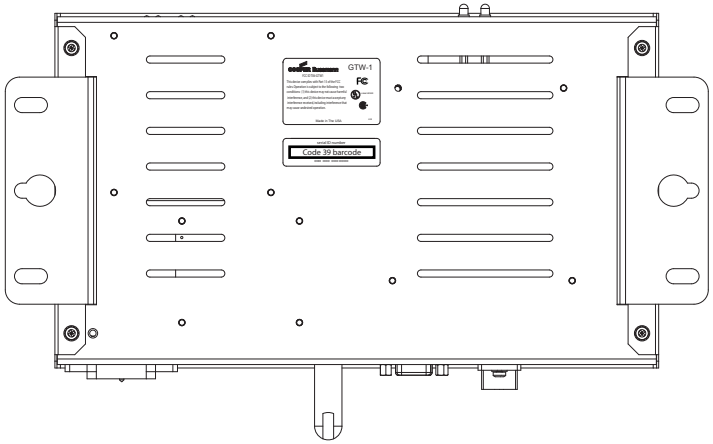
GTW-1
Code 39 barcode