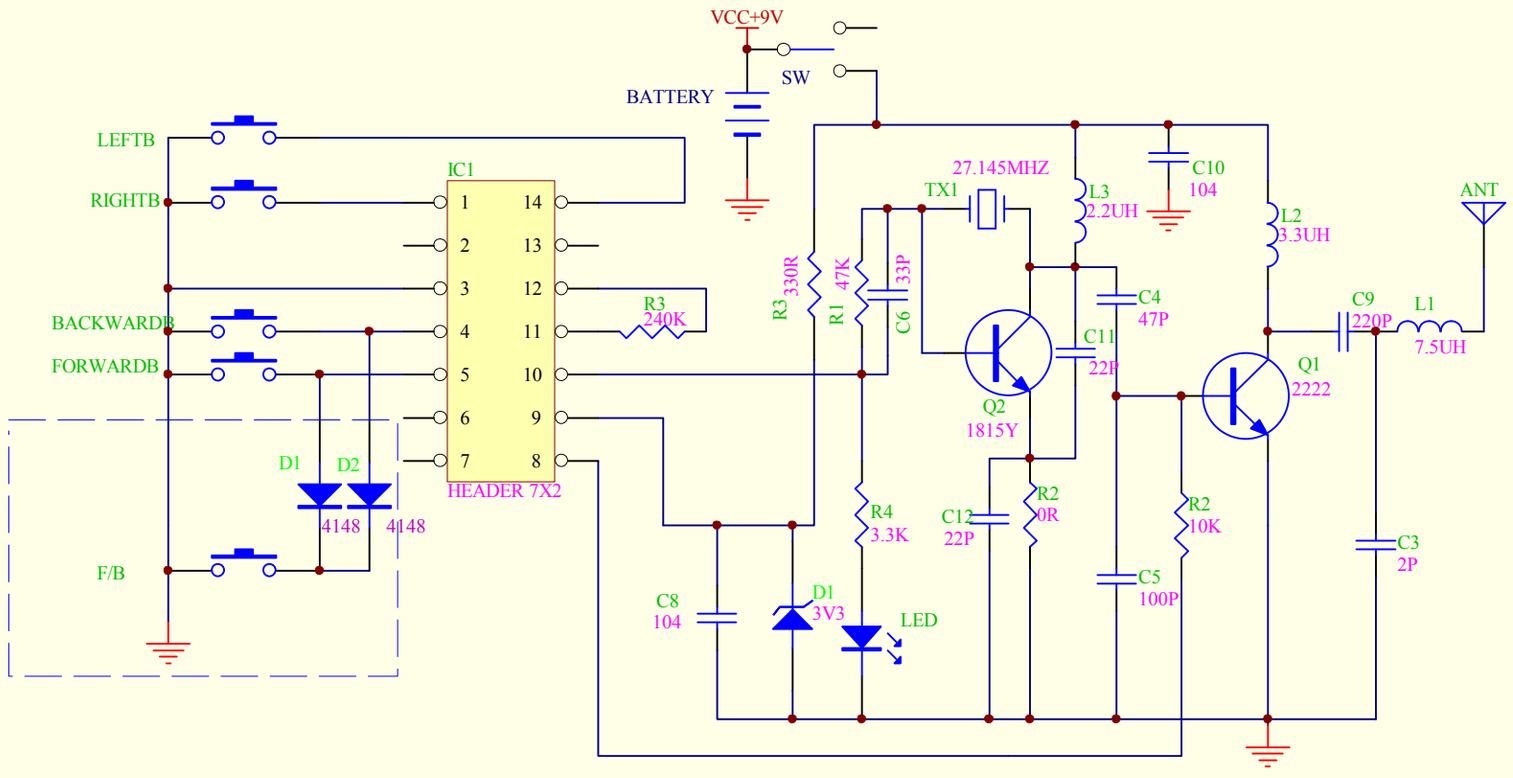

TX-27MHZ	COMPANY:		
	MODEL NO:		
	MODEL NAME:		
DEZIGN:	TITLE:		
CHECKED:	DRAWING NO:		REV:
APPROVED:	CODE:	SIZE:	SHEET:

PDF 文件使用 "pdfFactory Pro" 试用版本创建 www.fineprint.com.cn