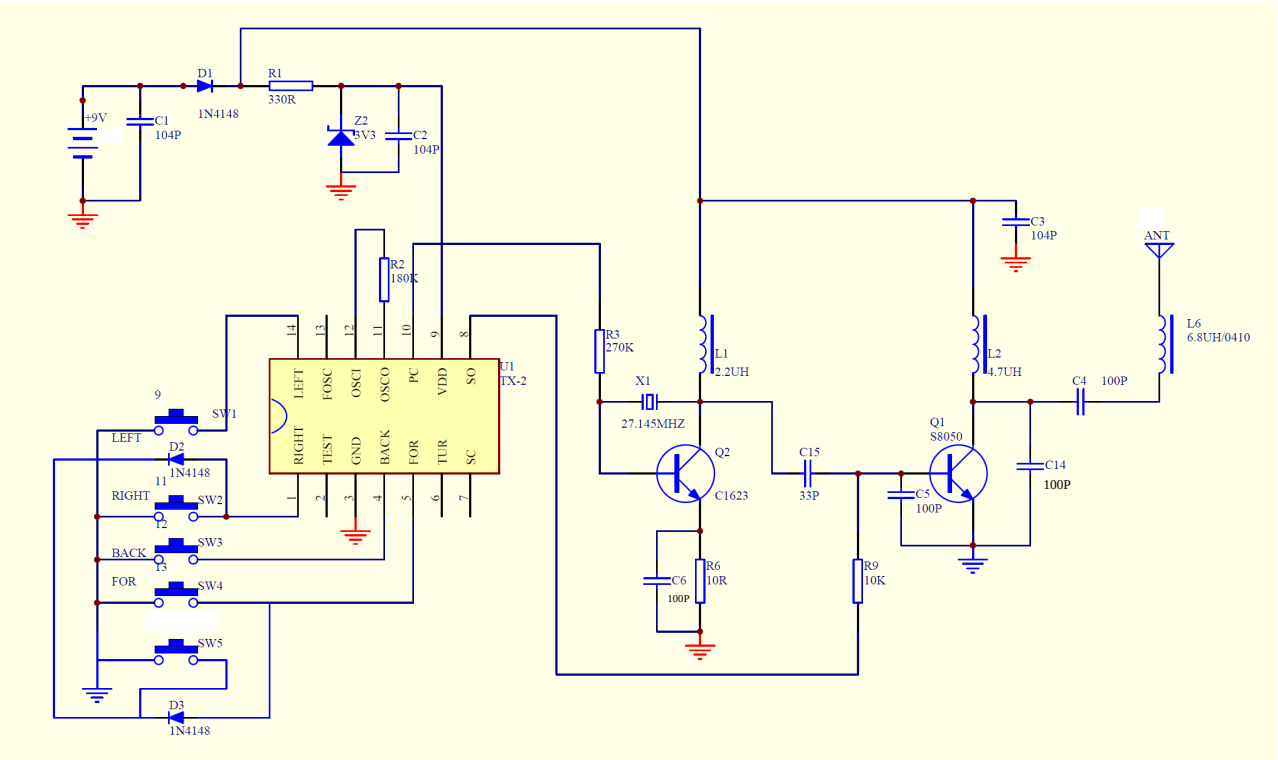Transmitter Circuit