XD-4103T27M(SCH)

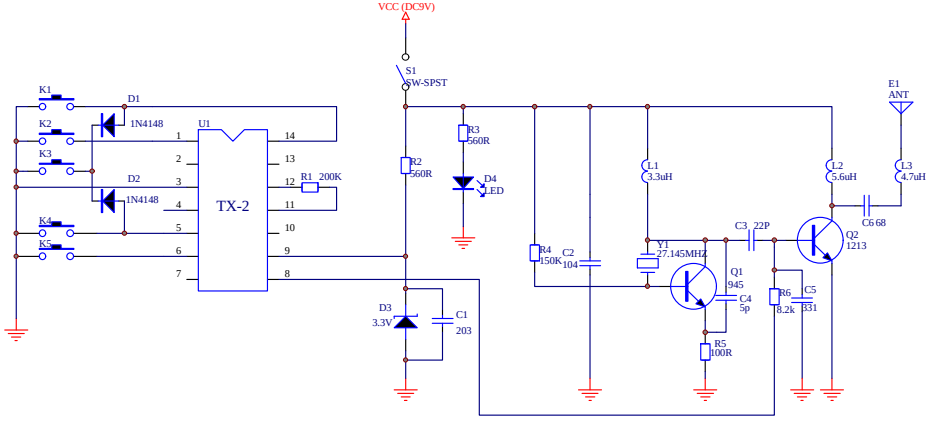

Title		
Size B	Number	Revision
Date: 14-Jun-2010		Sheet of
File: E:\设计图\wtu p\东信遥控玩具.DDB		Drawn By: