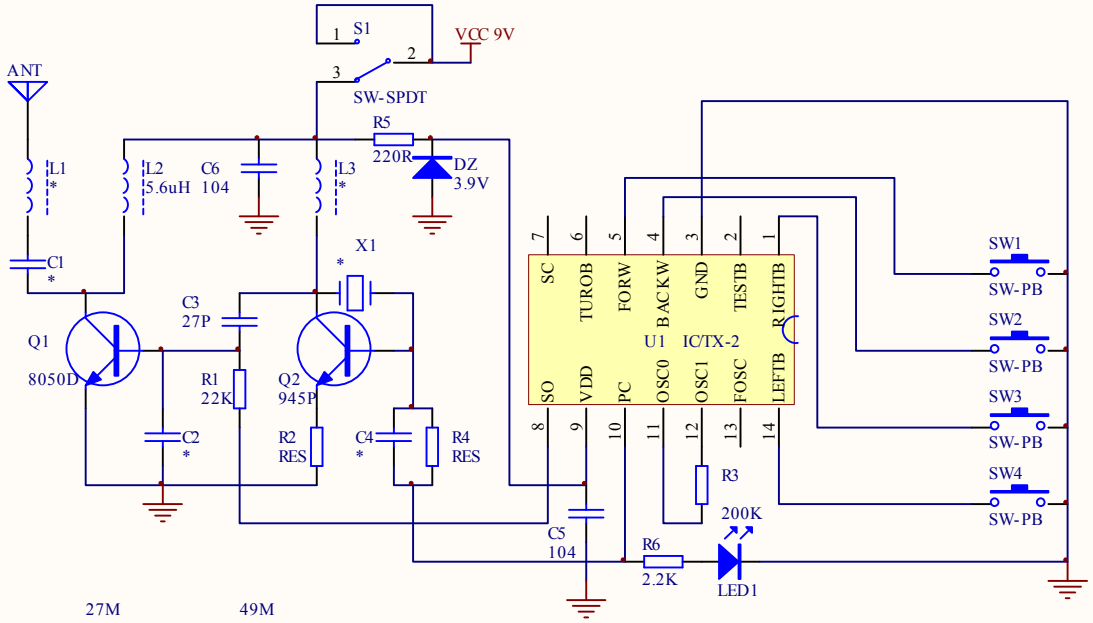

	27M	49M
C1:	151	101
C2:	471	101
C4:	18P	22p
L1:	8.2uH	3.3uH
L3:	5.6uH	1.0uH
X1	27.145MHz	49.860MHz