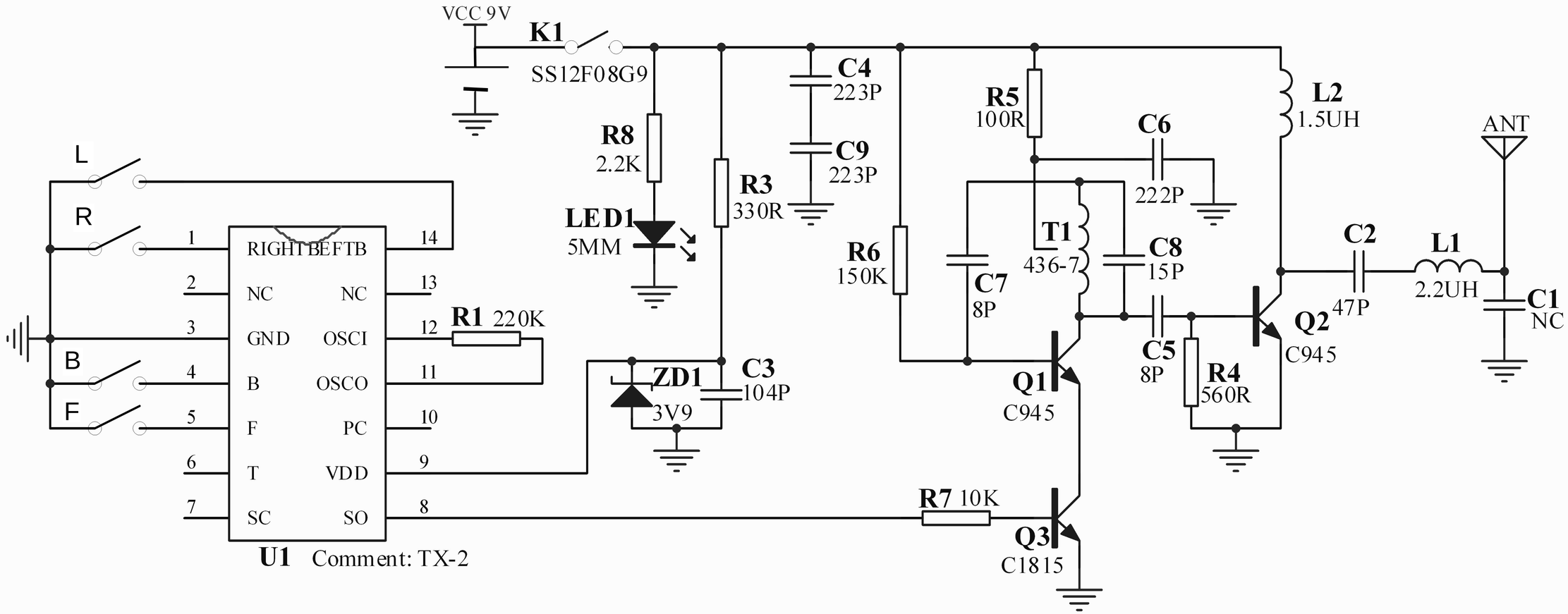

Title	佳全电子	
Size A4	Number JQ-DX1T 49MHZ接收板原理图	Revision
Date: 2010-6-21		Sheet of
File: C:\Documents and Settings\..\JQ-DX01T 49M.Sch		Drawn By: