JQ-DX01T (27.145MHz)

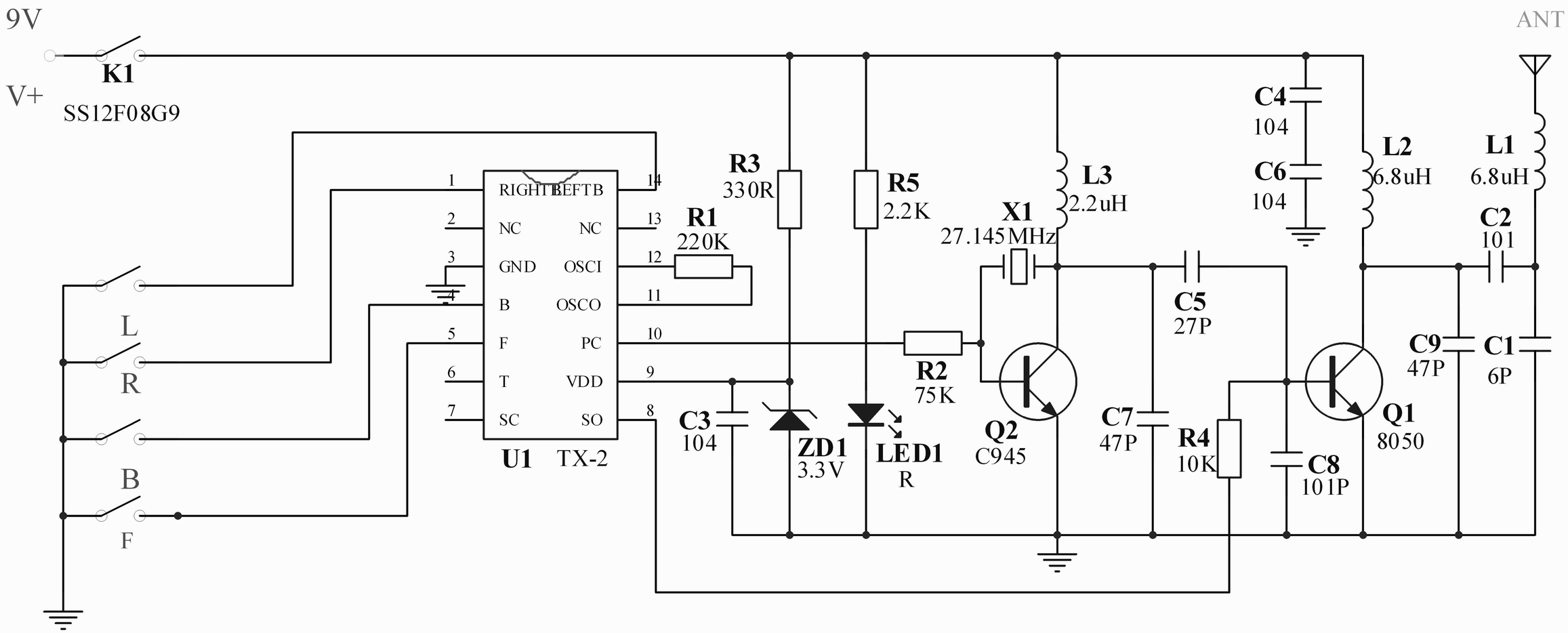

Title	佳 全 电 子		
Size A4	Number		Revision
Date:	2010-7-1	Sheet of	
File:	C:\Documents and Settings\...\JQ-DX01T(27.145).SCH	Drawn By:	