FreeFlight Systems
Proprietary and Confidential
THE INFORMATION CONTAINED WITHIN THIS DOCUMENT IS PROPRIETARY AND COPYRIGHT ©2005, ALL RIGHTS RESERVED. IT IS UNLAWFUL TO CREATE OR POSSESS UNAUTHORIZED COPIES OF THIS DOCUMENT AND/OR ITS ATTACHMENTS.

DWG NO.	SHT	REV.
84560–XX–AD	1	C

REVISIONS

REV.	DESCRIPTION	DATE	APPROVED
A	INITIAL RELEASE	050830	RR
B	REV PER ECN F05032	051121	LB
C	REV PER ECN F06006		

TYPED SIGNATURES INDICATE APPROVAL. HANDWRITTEN SIGNATURE APPROVAL OF THIS DOCUMENT IS ON FILE AT FREEFLIGHT SYSTEMS, WACO, TEXAS.

PRELIMINARY

NOTES:

1 PLACE P/N 16172 ON 3 SIDES OF ITEM 190 AS SHOWN IN DETAIL A.

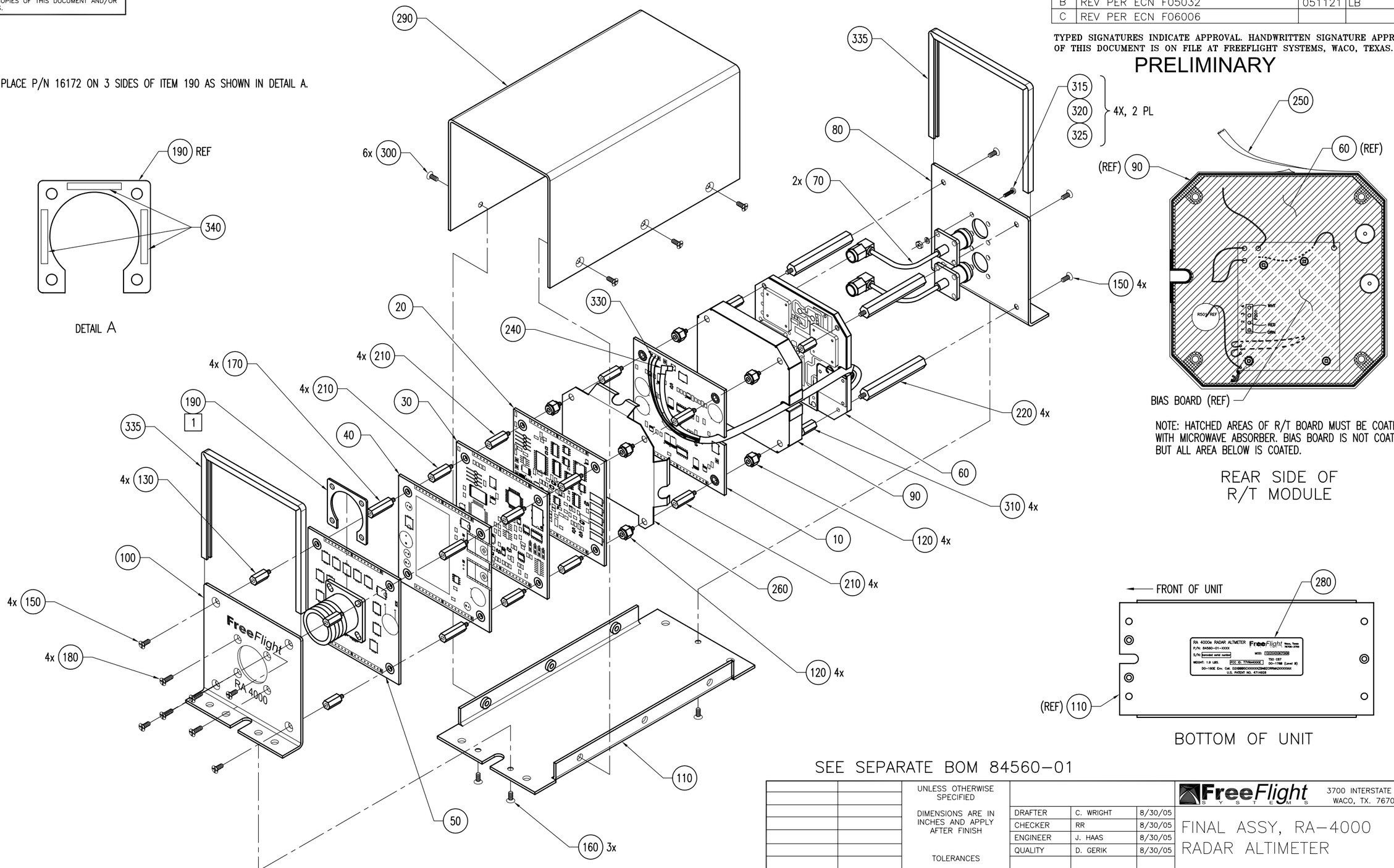

SEE SEPARATE BOM 84560–01

TOP	RA–4000
NEXT ASSY	USED ON
APPLICATION	

UNLESS OTHERWISE SPECIFIED

DIMENSIONS ARE IN INCHES AND APPLY AFTER FINISH

TOLERANCES

.X ± .1
.XX ± .02 ANG
.XXX ± .005 ± 1°

DRAFTER	C. WRIGHT	8/30/05
CHECKER	RR	8/30/05
ENGINEER	J. HAAS	8/30/05
QUALITY	D. GERIK	8/30/05

DO NOT SCALE DRAWING

FreeFlight SYSTEMS
3700 INTERSTATE 35
WACO, TX. 76706

FINAL ASSY, RA–4000
RADAR ALTIMETER

SIZE	CAGE CODE	DWG. NO.	REV.
B	1WAN0	84560–XX–AD	C

SCALE: NTS SHEET 1 OF 1