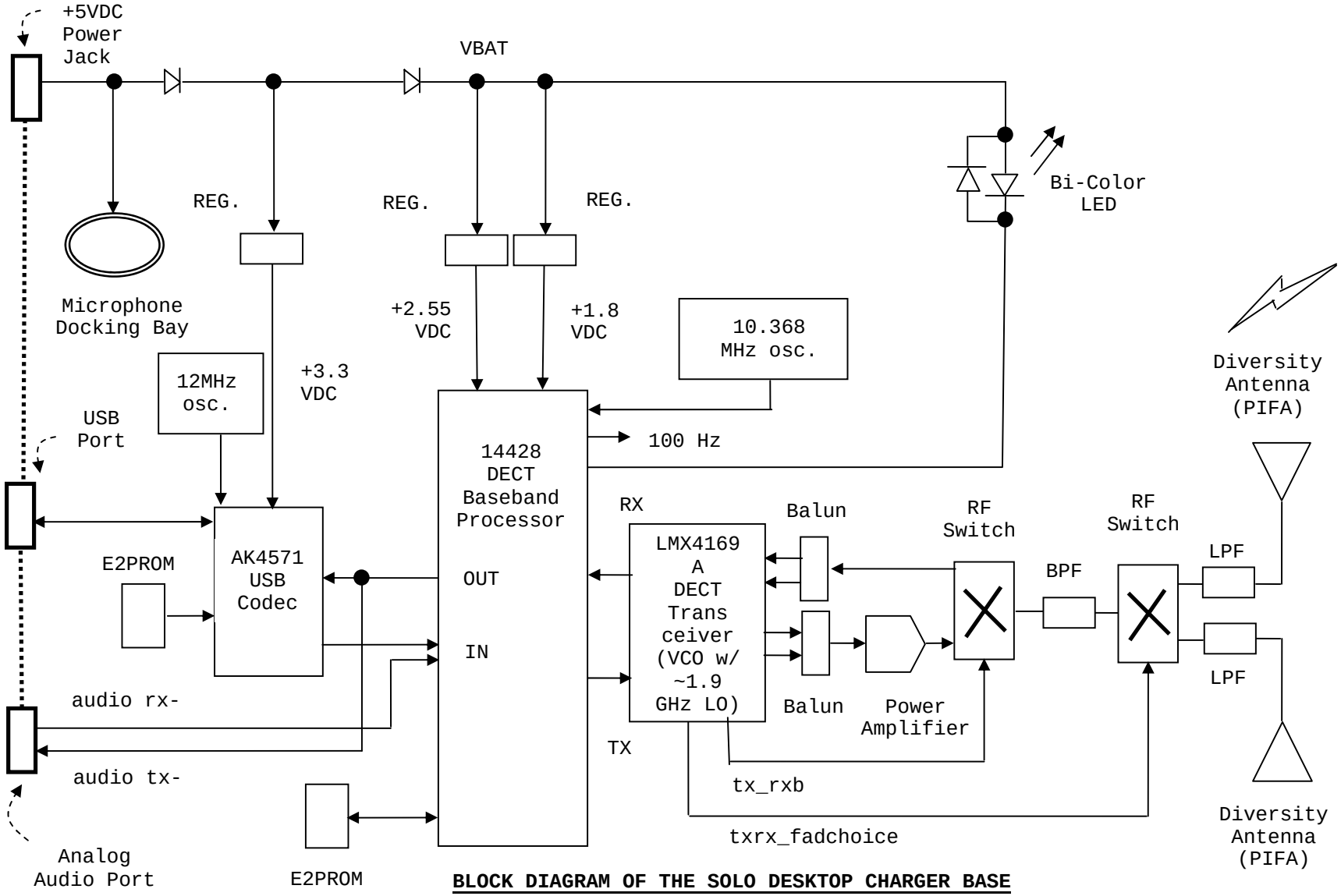

BLOCK DIAGRAM OF THE SOLO DESKTOP CHARGER BASE