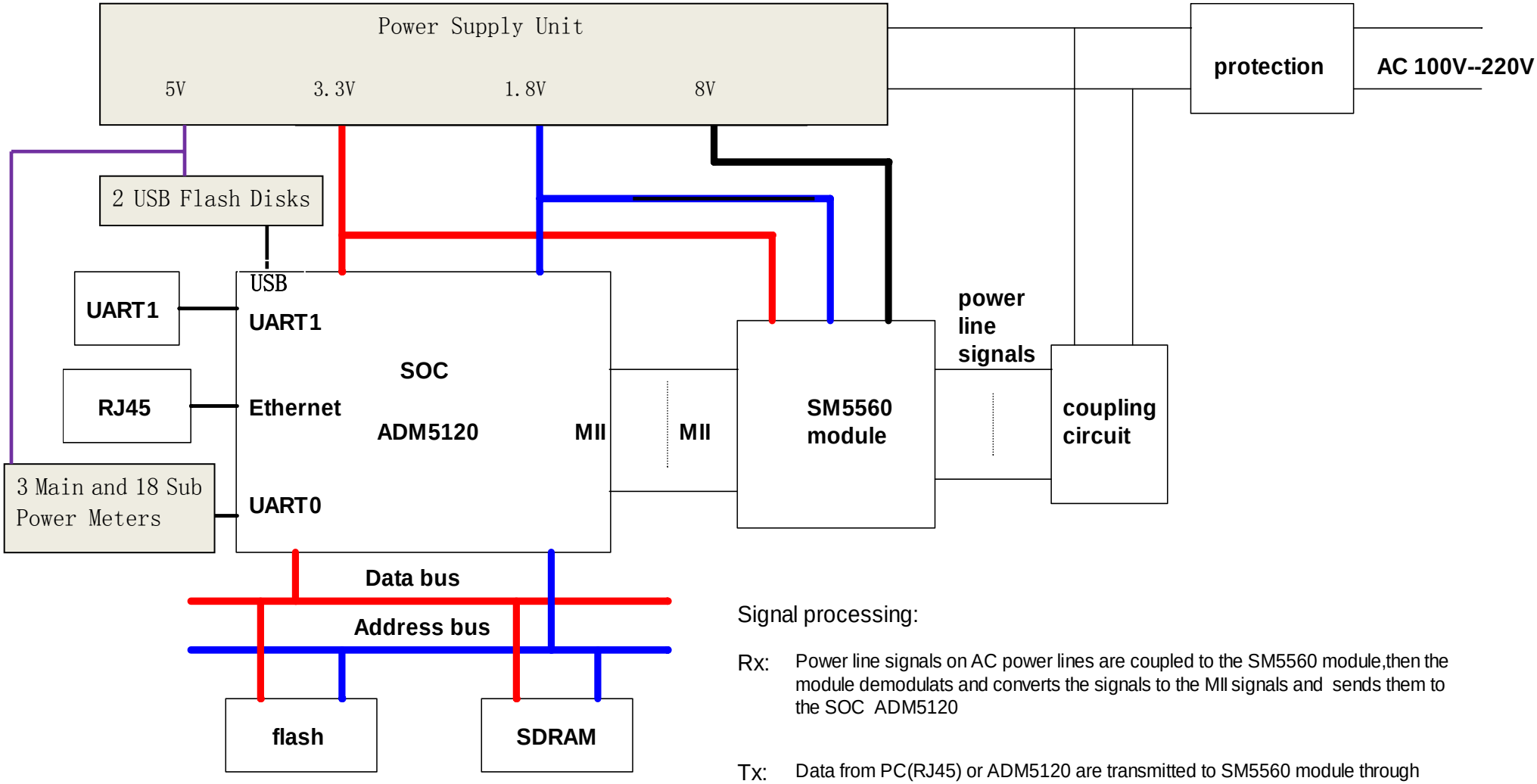

Signal processing:

Rx: Power line signals on AC power lines are coupled to the SM5560 module,then the module demodulats and converts the signals to the MII signals and sends them to the SOC ADM5120

Tx: Data from PC(RJ45) or ADM5120 are transmitted to SM5560 module through MII port. The module modulates the data to the power line signals.At last, the signals are coupled to the AC power lines.