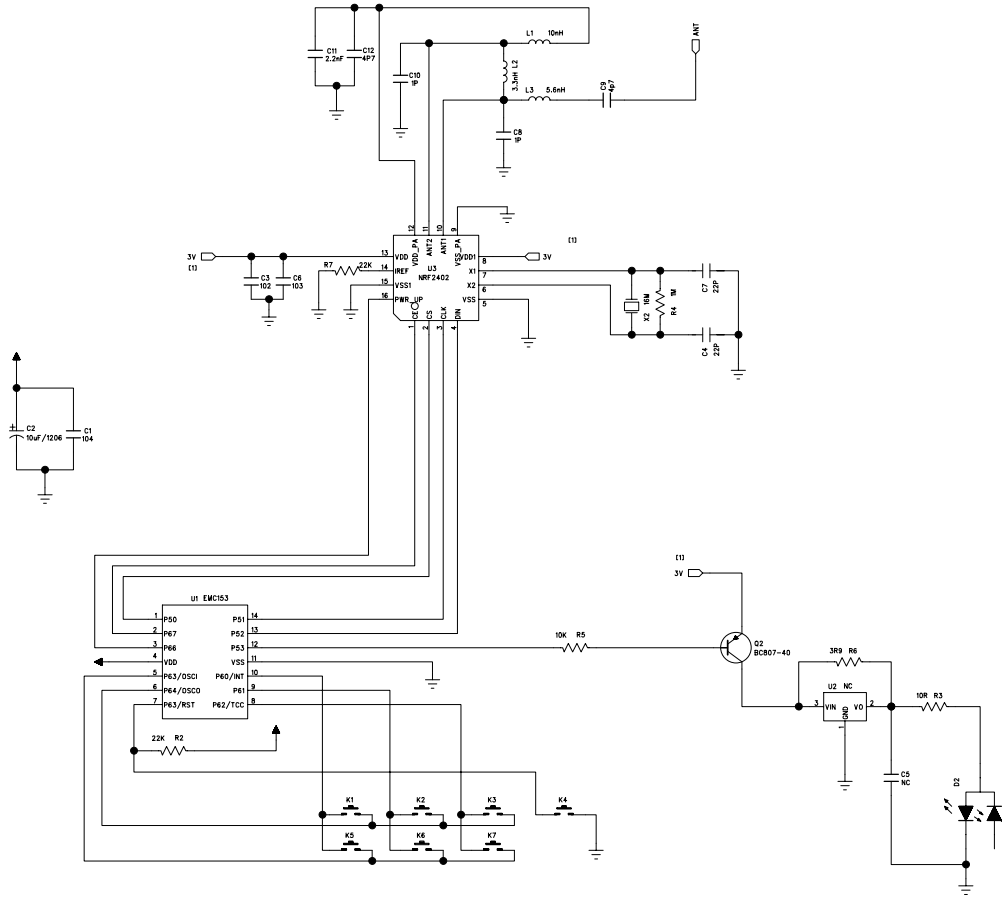

	DRAWN BY	APPROVED BY	DATE
01	SMITH		
02	WYD		

TITLE:	
DOC NO:	DIVISION: R&D
MOD NO:	DRAWN BY: WYD
PART NO:	CHECKED BY:
Sheet 1 of 1	APPROVED BY: