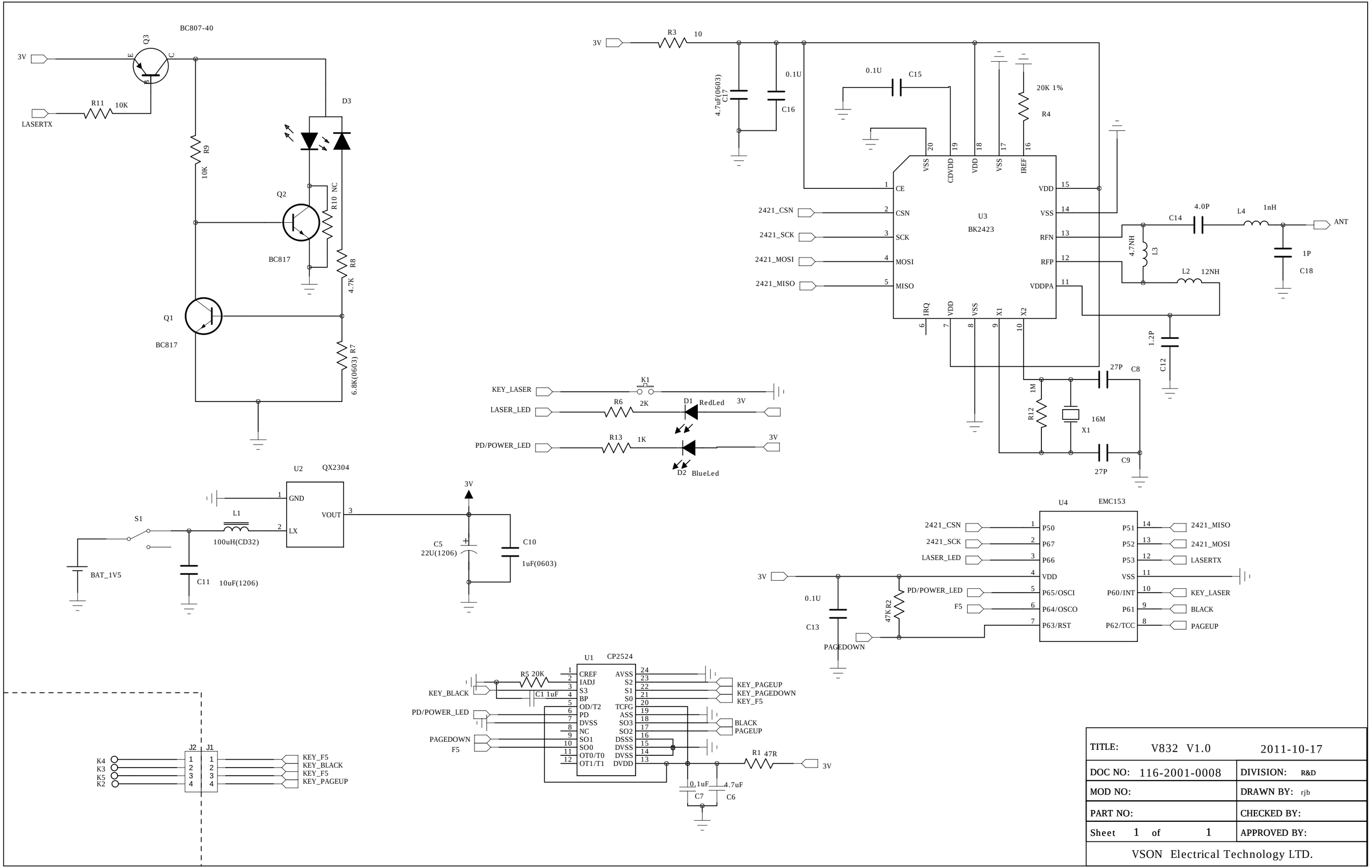

TITLE: V832 V1.0 2011-10-17	
DOC NO: 116-2001-0008	DIVISION: R&D
MOD NO:	DRAWN BY: rjb
PART NO:	CHECKED BY:
Sheet 1 of 1	APPROVED BY:
VSON Electrical Technology LTD.	