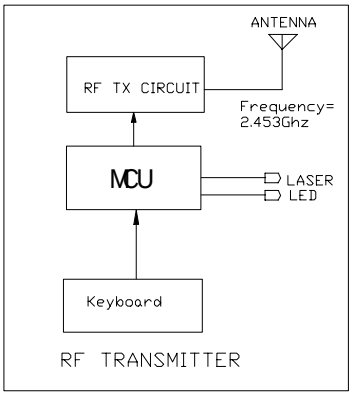
ANTENNA
RF TX CIRCUIT
Frequency=
2.453Ghz
MCU
LASER
LED
Keyboard
RF TRANSMITTER

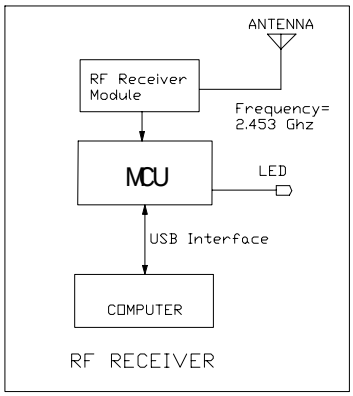
ANTENNA
RF Receiver
Module
Frequency=
2.453 Ghz
MCU
LED
USB Interface
COMPUTER
RF RECEIVER