	DRAWN BY	APPROVED BY	DATE
01			
02			

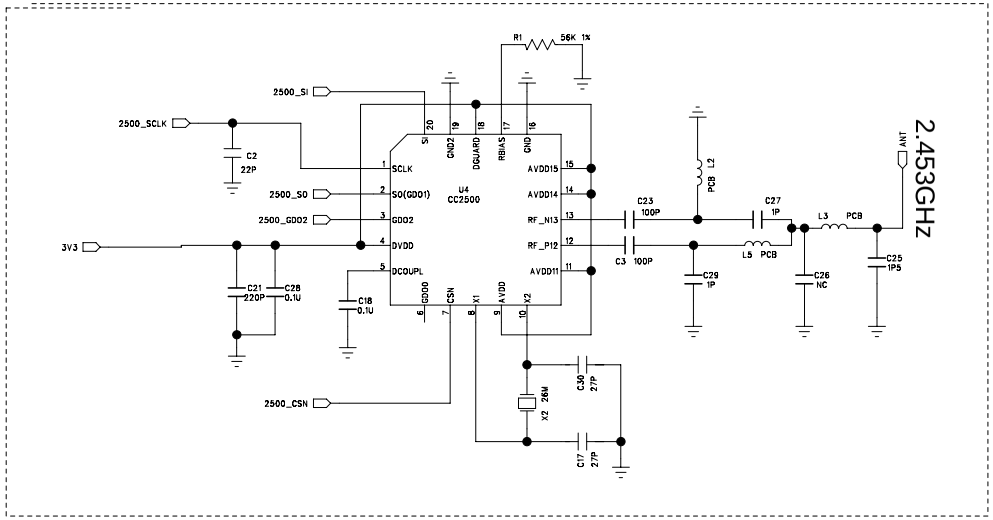

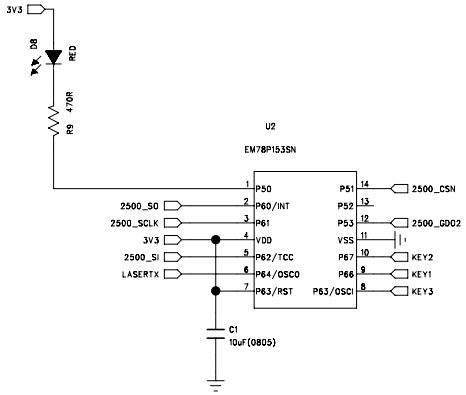

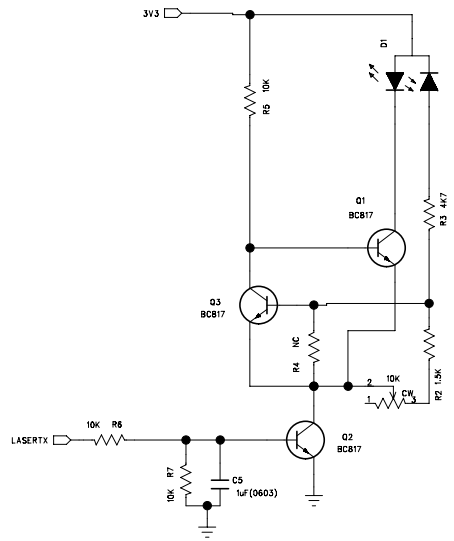

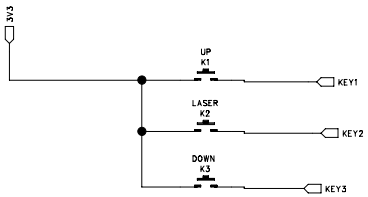

TITLE: V610	
DOC NO:	DIVISION: R&D
MOD NO:	DRAWN BY:
PART NO:	CHECKED BY:
Sheet 1 of 1	APPROVED BY: