REVISIONS				
PCN	REV	DESCRIPTION	DATE	APPROVED

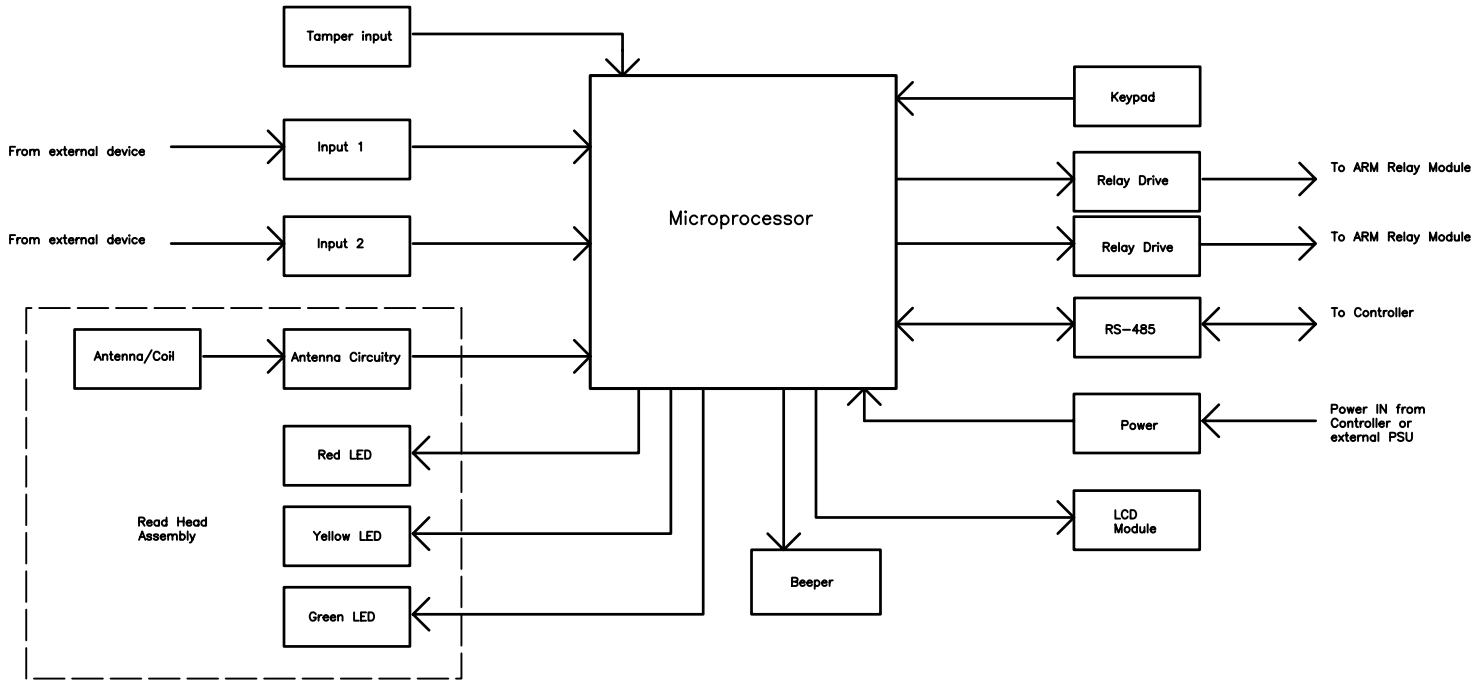

SOFTWARE HOUSE
70 Westview Street
Lexington, MA 02421
(781) 466-6660

RM-xx Block Diagram

DRAWN	SIZE	FSCM NO.	DWG NO.	REV
M. DeCristofaro				
DATE	SCALE		SHEET 1 of 1	