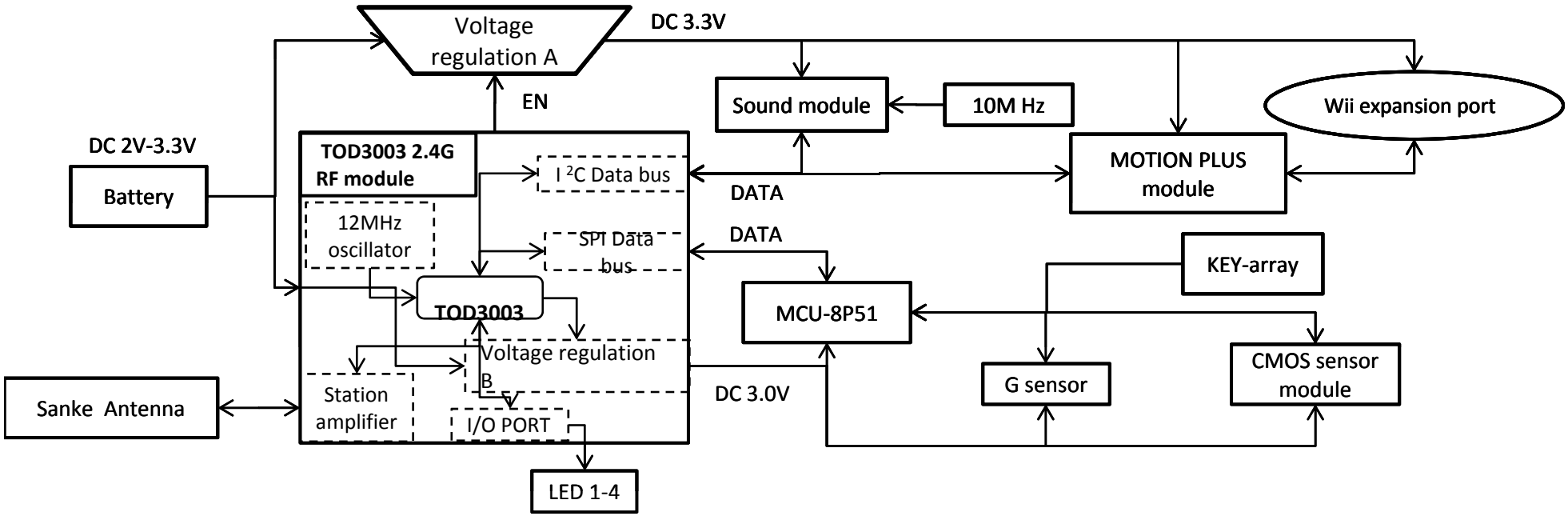WAND+ topological structure