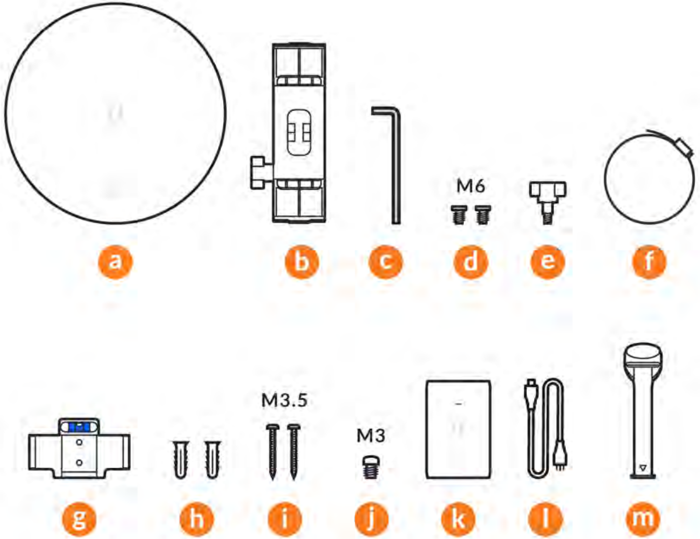
a
b
c
M6
d
e
f
g
h
M3.5
i
M3
j
k
l
m

1

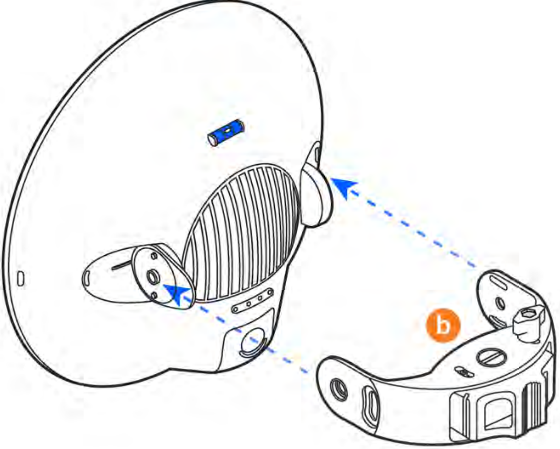

2

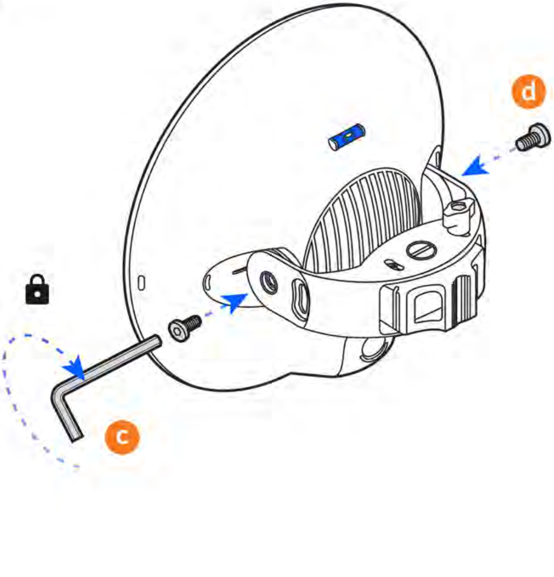

3

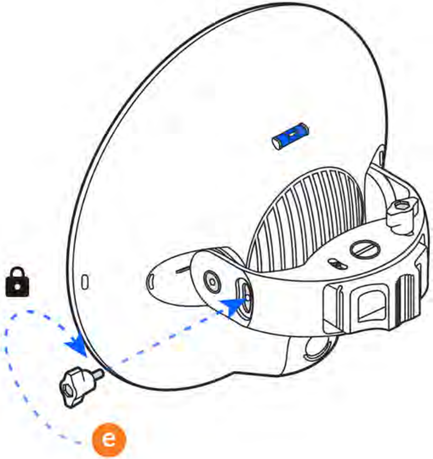

4

A

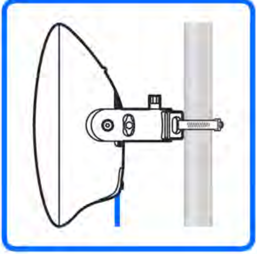

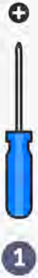

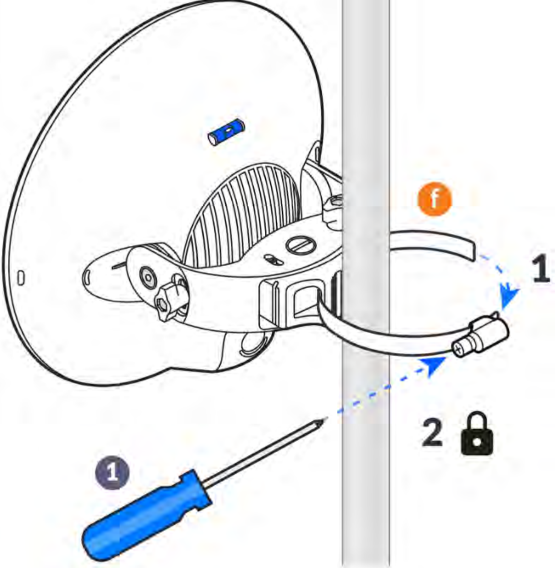

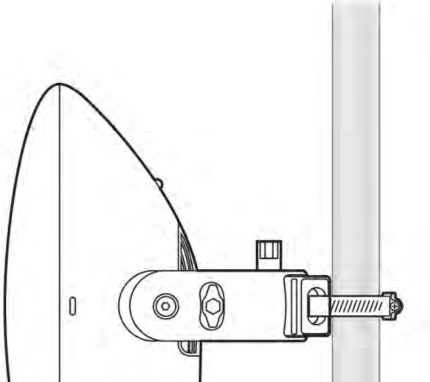

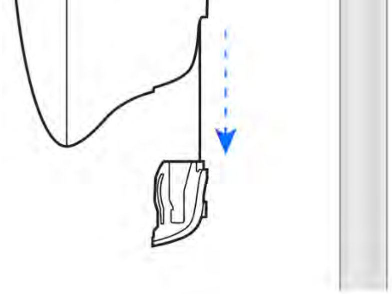

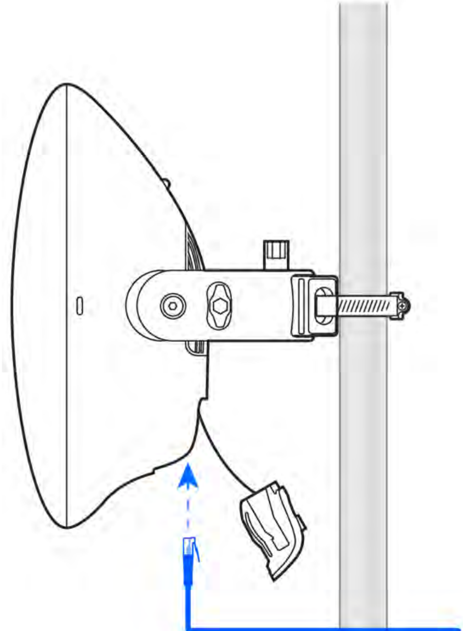

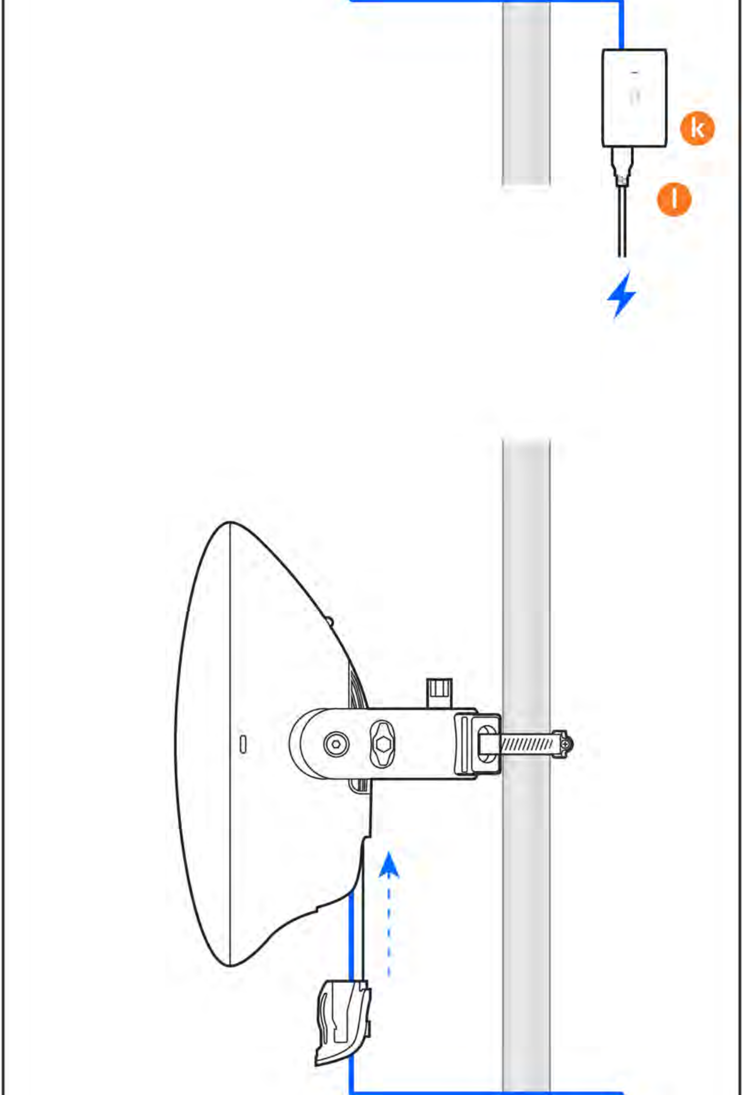

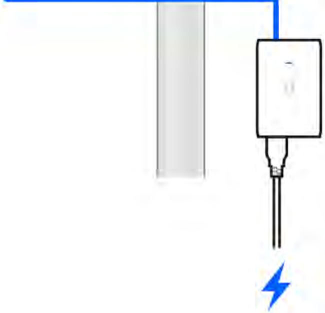

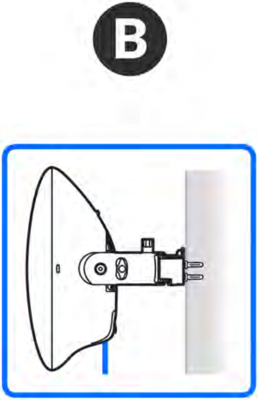

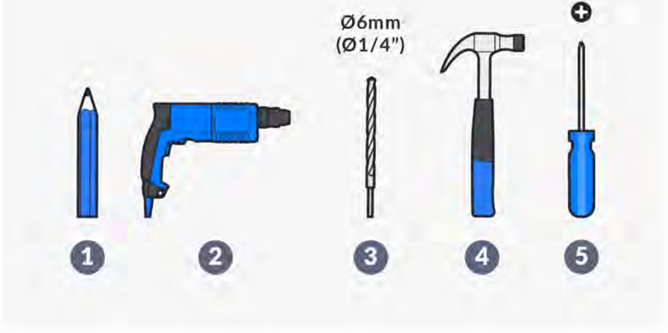
Ø6mm
(Ø1/4")
1
2
3
4
5

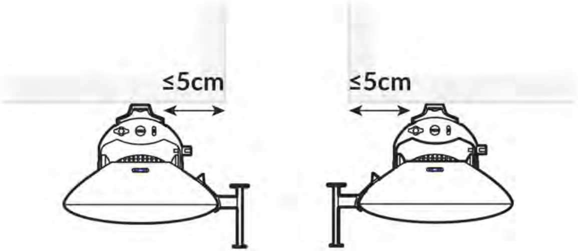

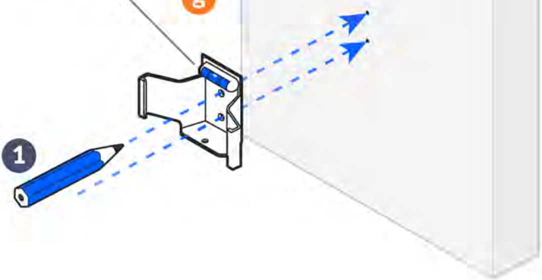

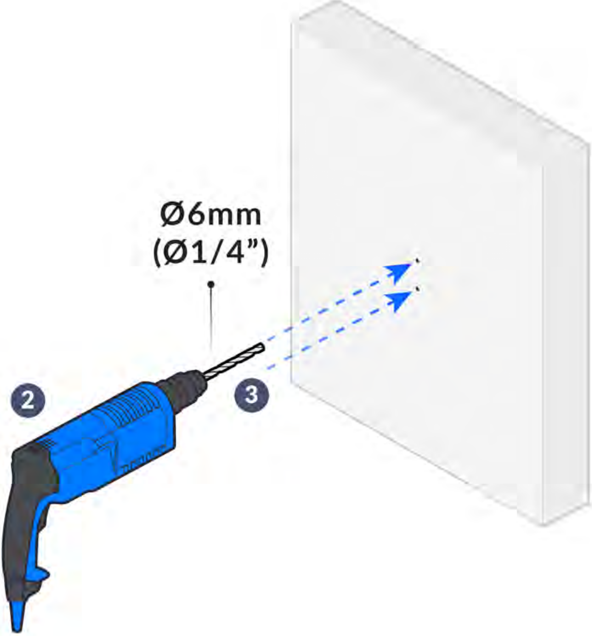

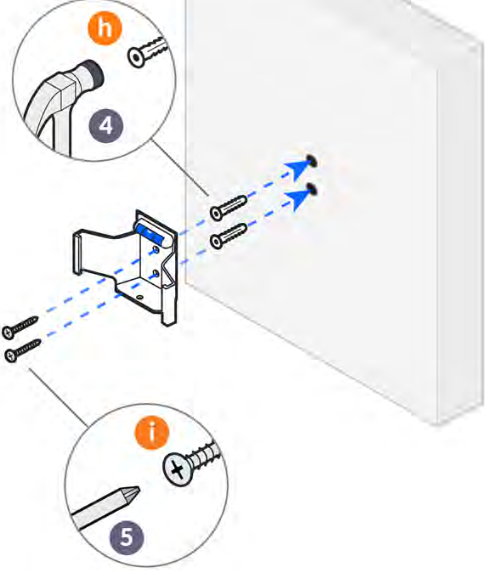

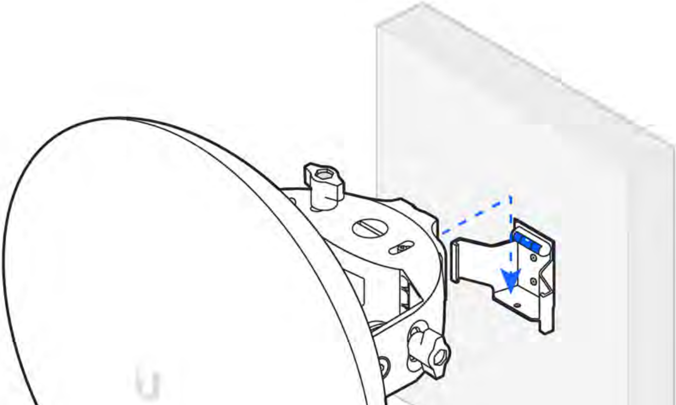

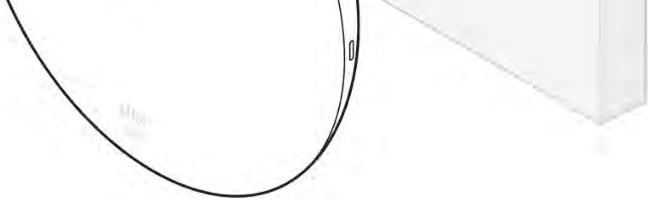

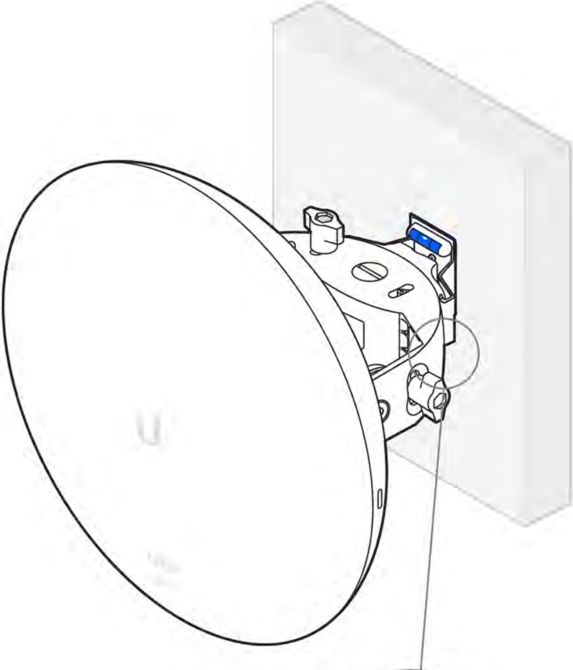

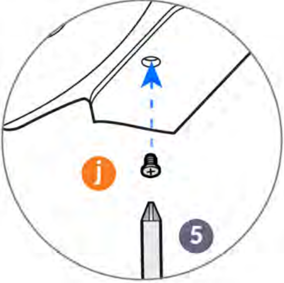

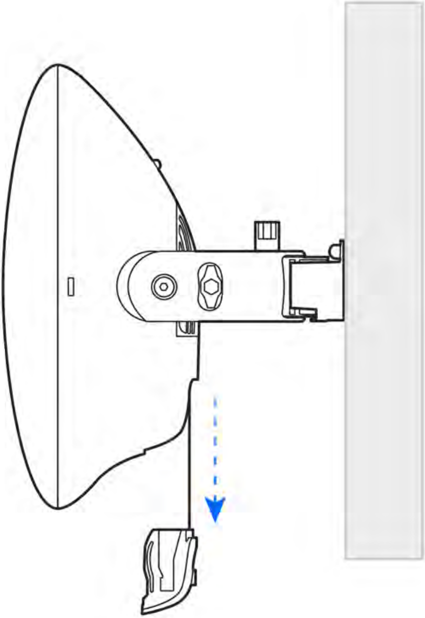

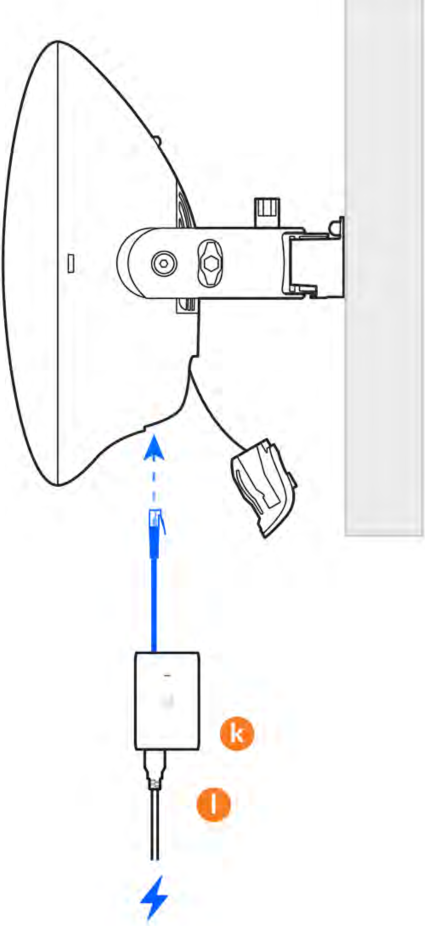

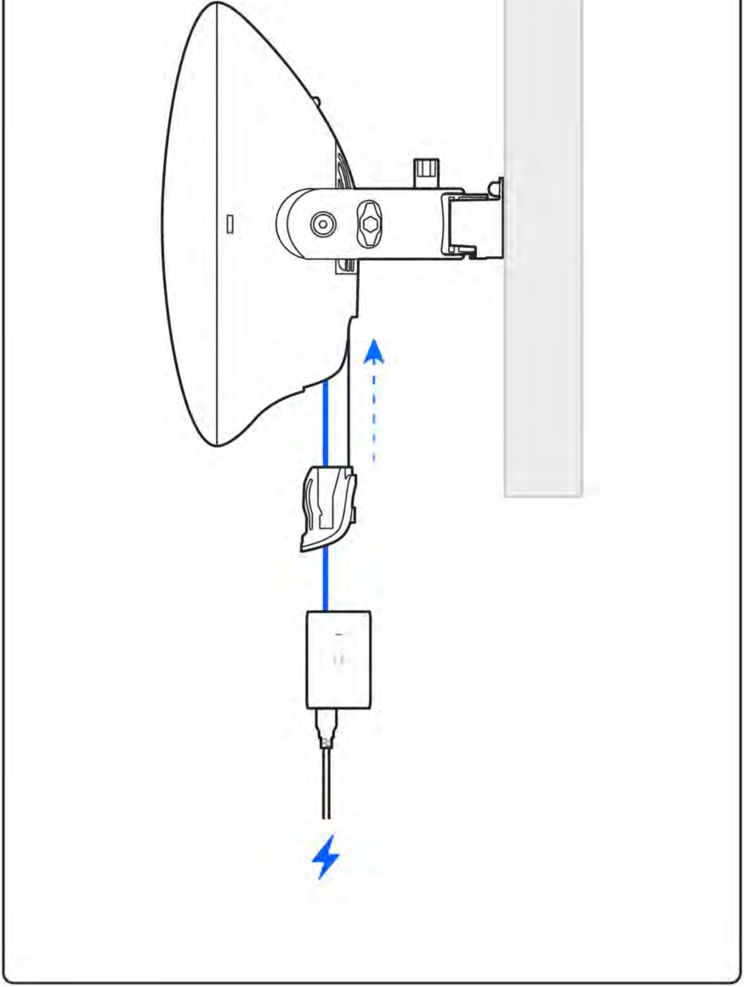

5

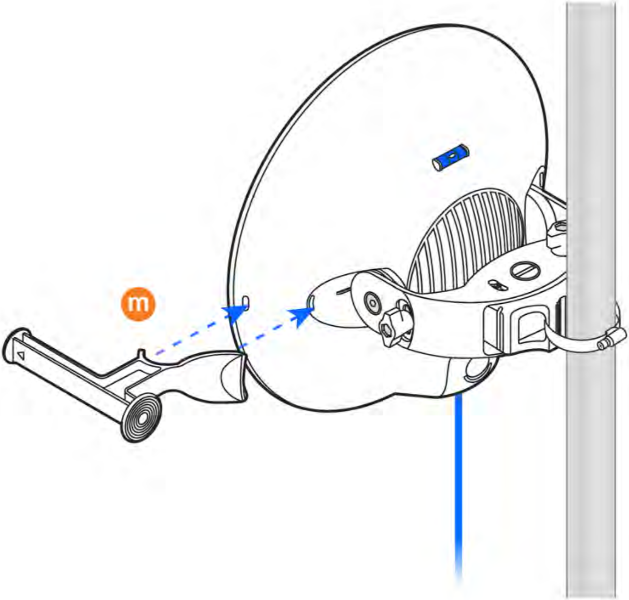

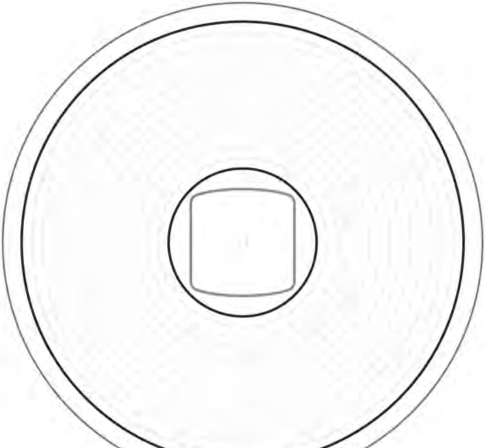

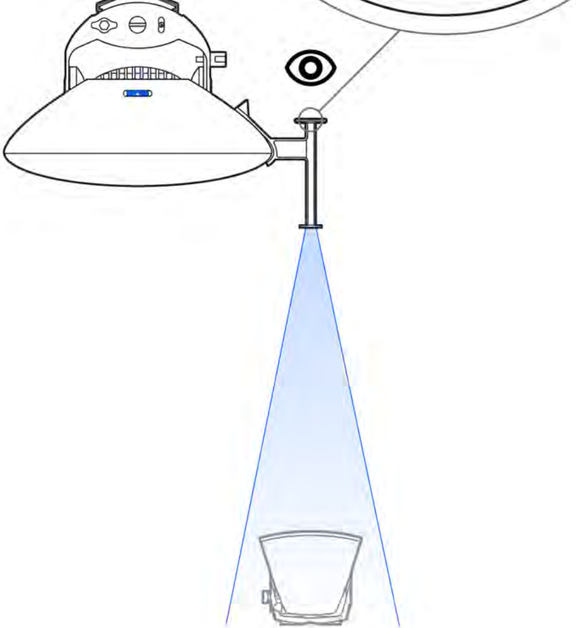

6

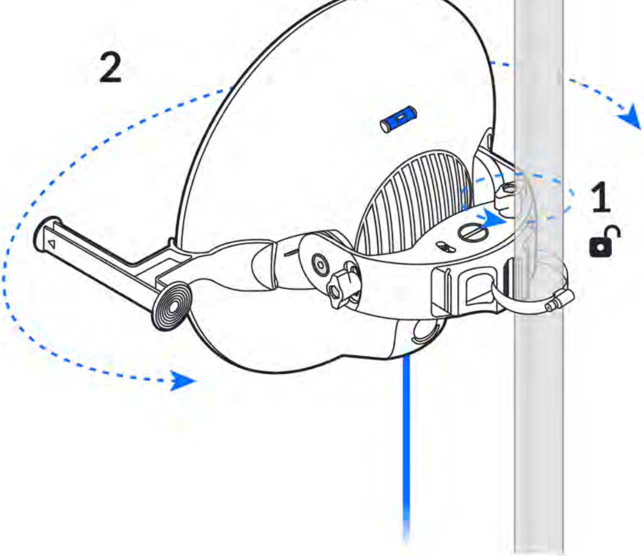

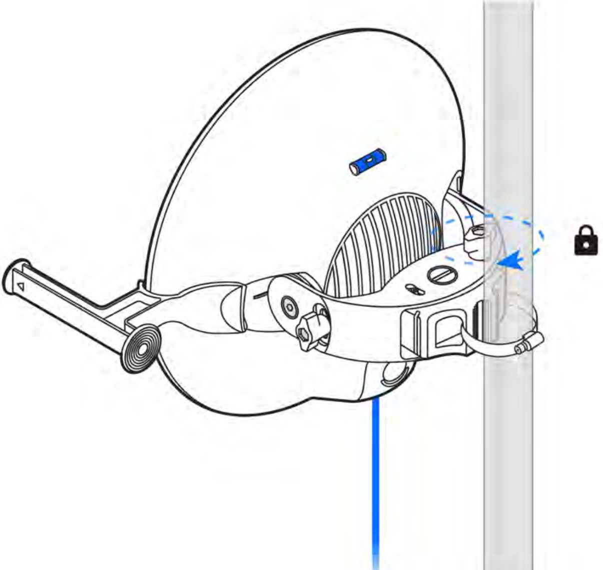

7

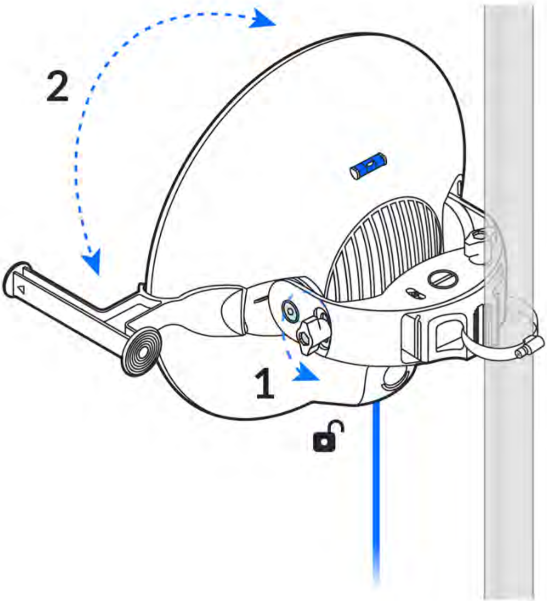

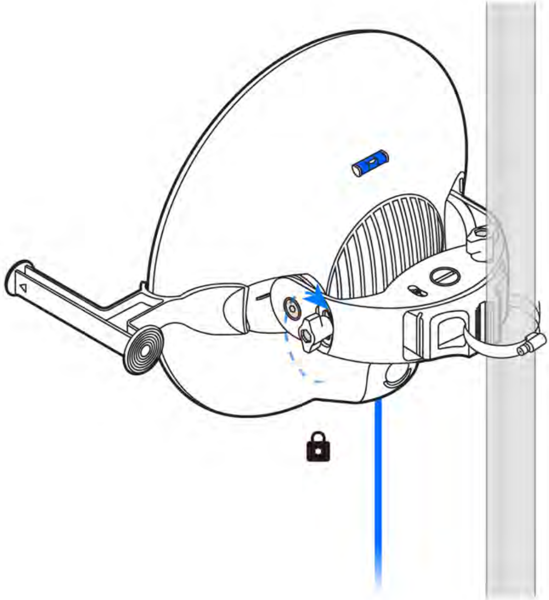

8

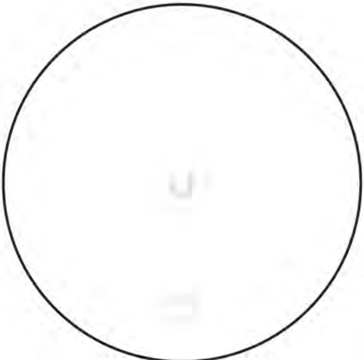

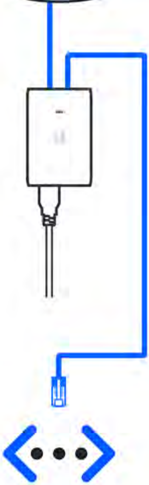

9

Download on the App Store

GET IT ON Google Play

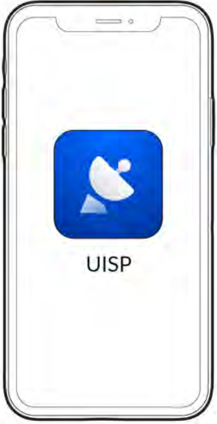

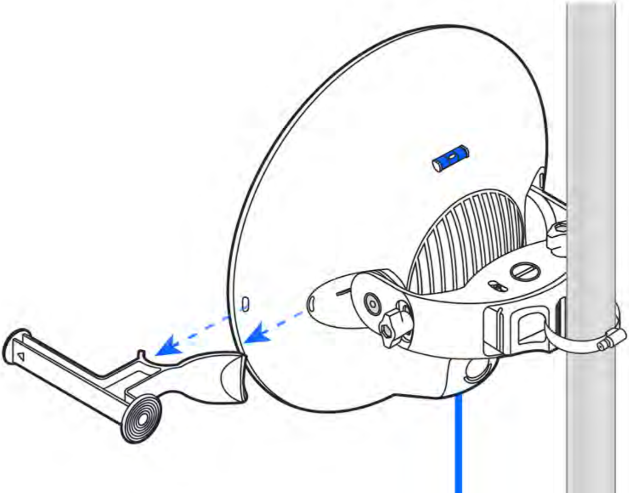

Get Answers
help.ui.com

UI Support