UniFi Talk Conference

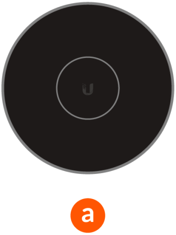

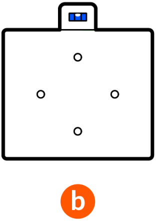

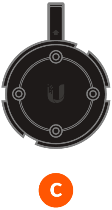

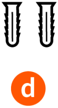

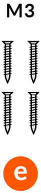

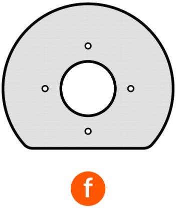

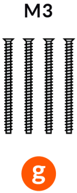

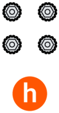

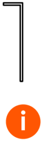

1

A

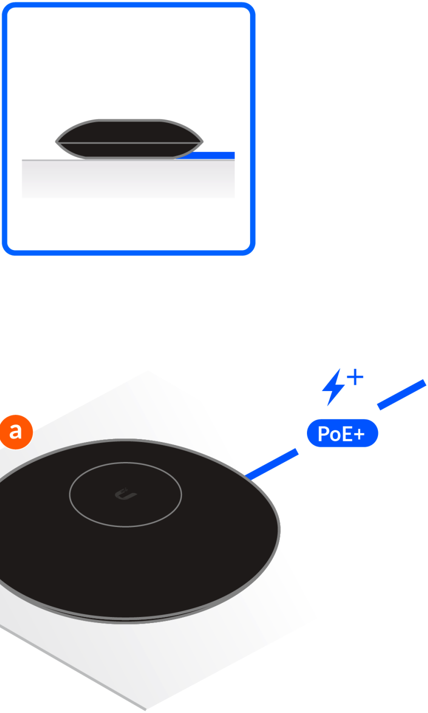

B

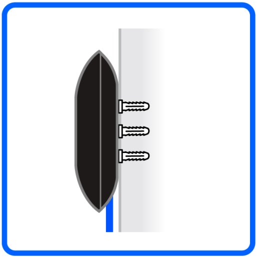

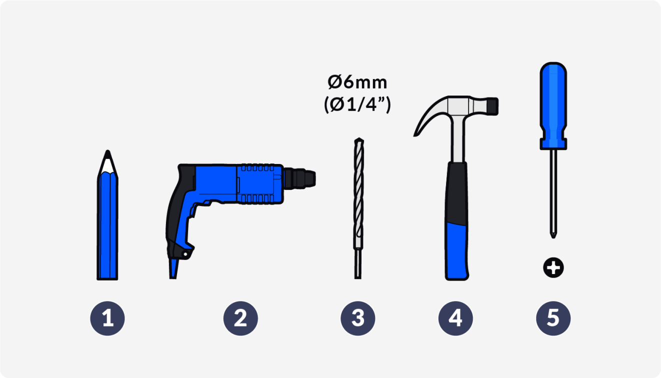
Ø6mm
(Ø1/4")
1
2
3
4
5

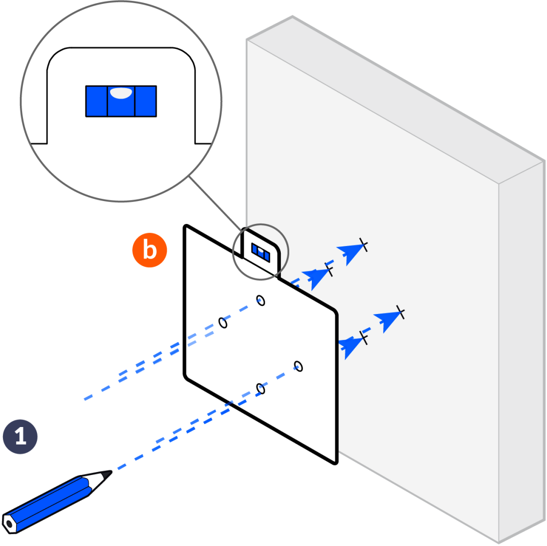

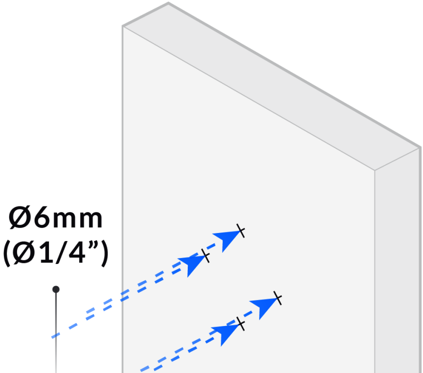

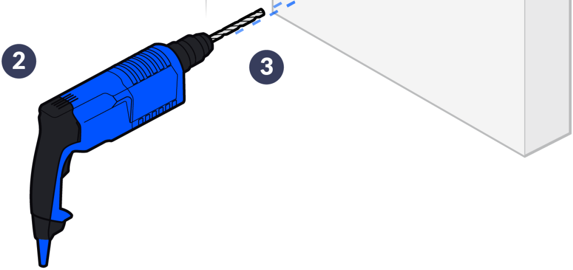

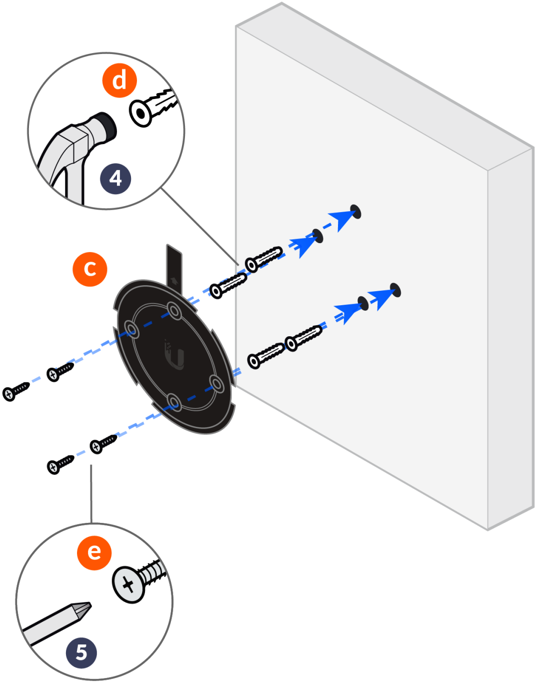

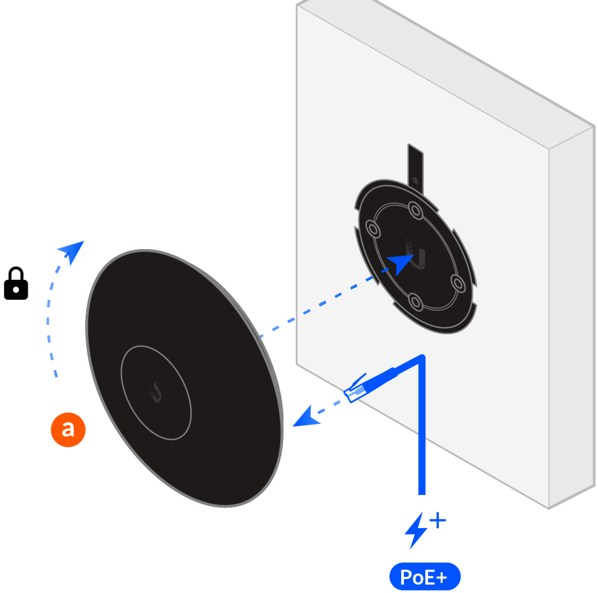

C

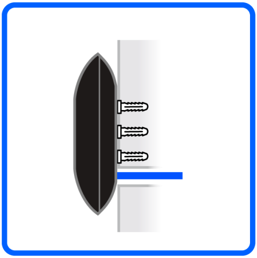

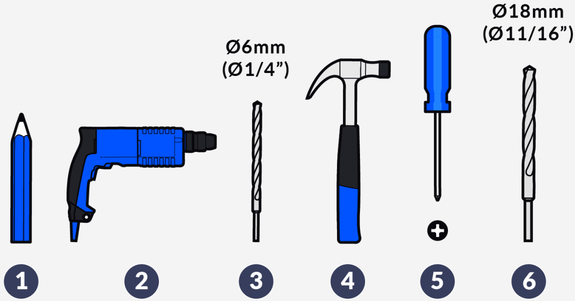
Ø6mm
(Ø1/4")
Ø18mm
(Ø11/16")
1
2
3
4
5
6

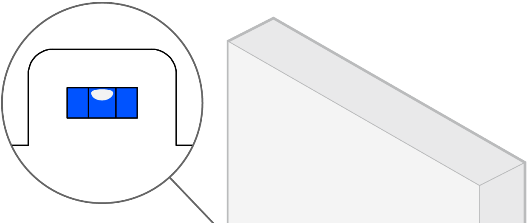

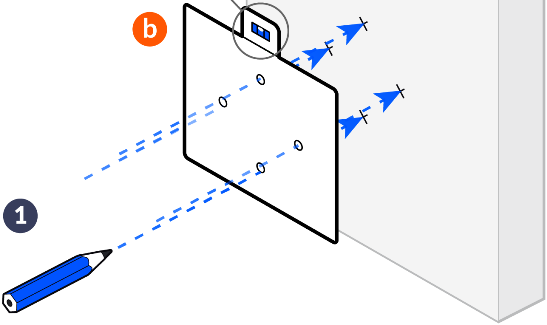

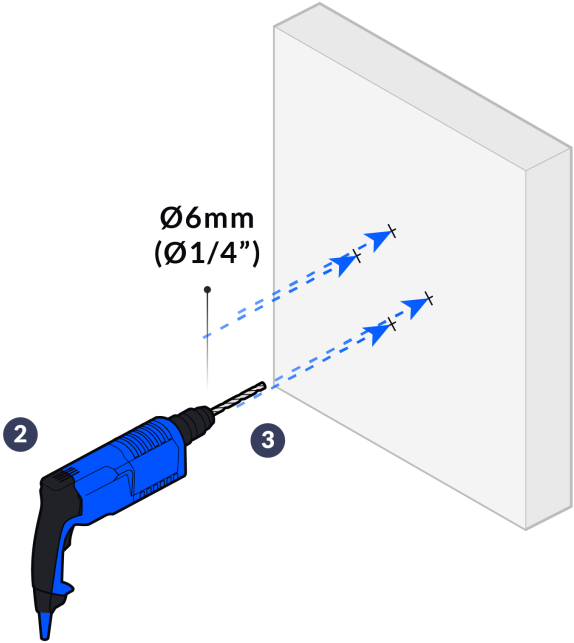

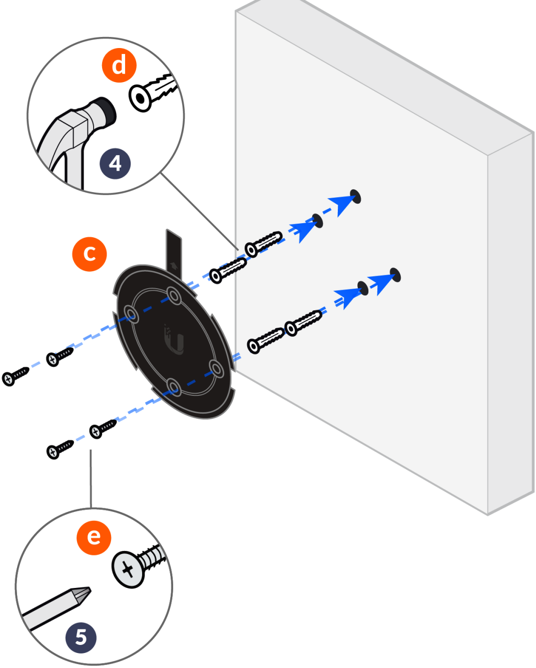

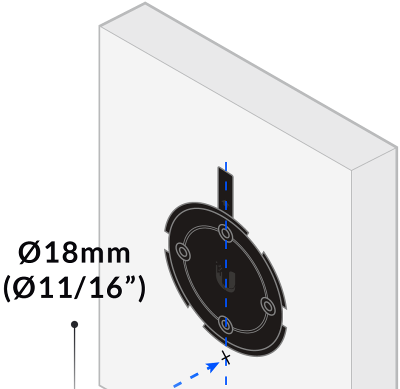
Ø18mm
(Ø11/16")

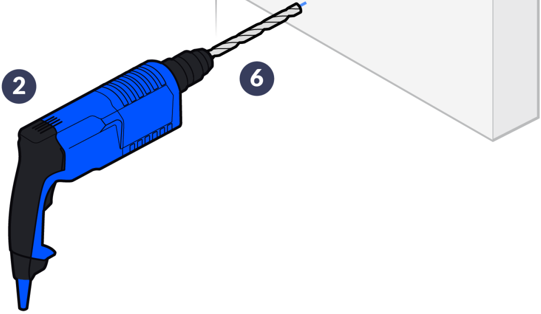

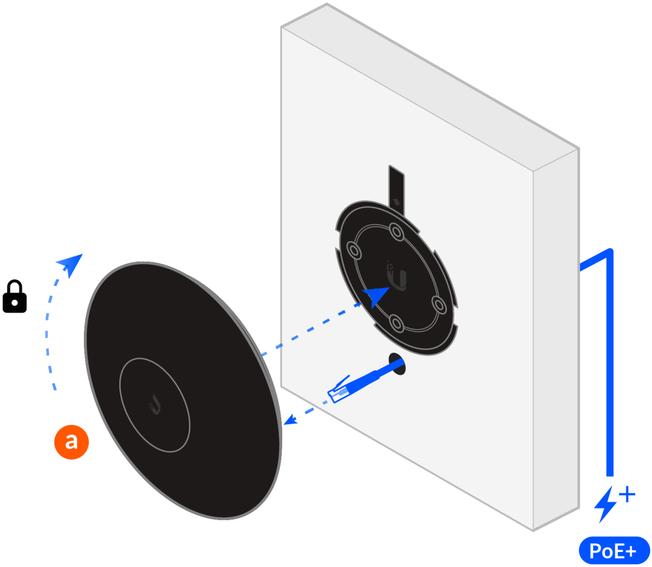

D

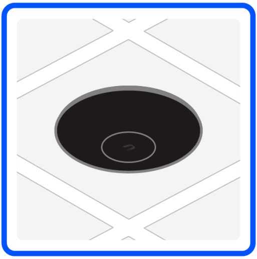

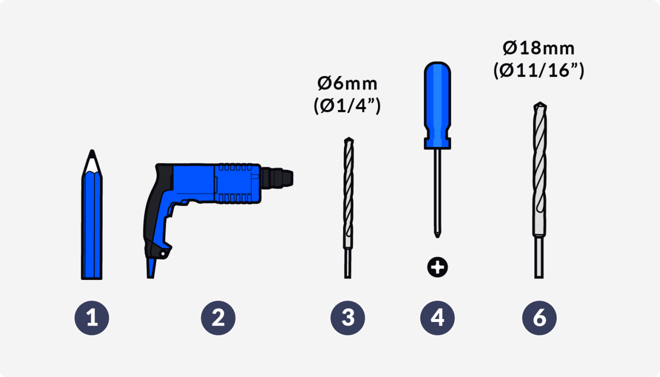
Ø6mm
(Ø1/4”)
Ø18mm
(Ø11/16”)
1
2
3
4
6

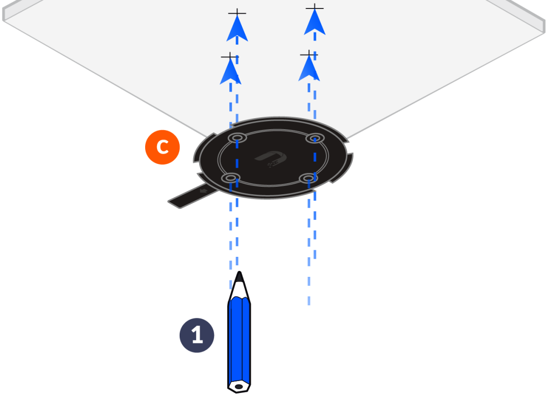

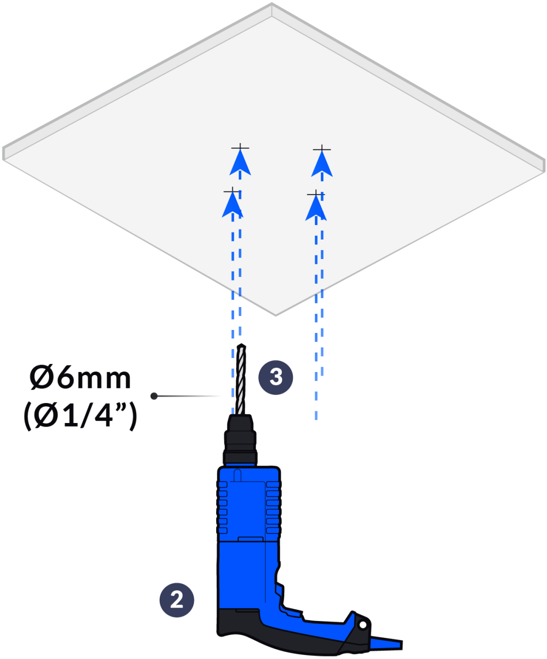

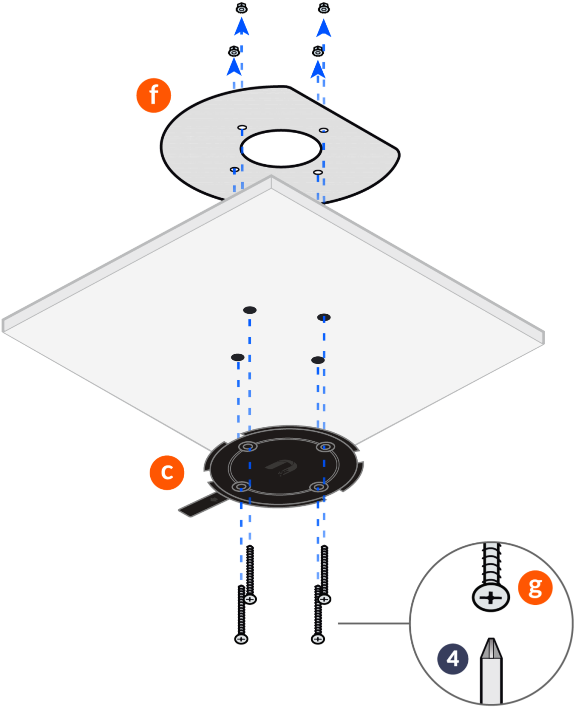

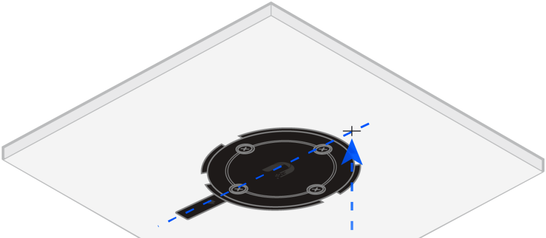

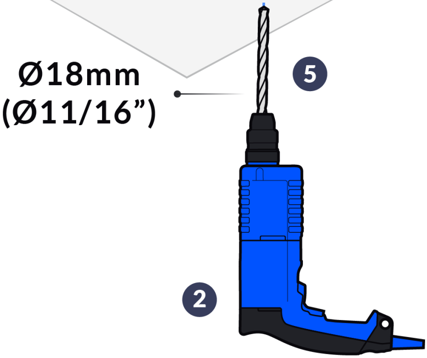
Ø18mm
(Ø11/16”)
5
2

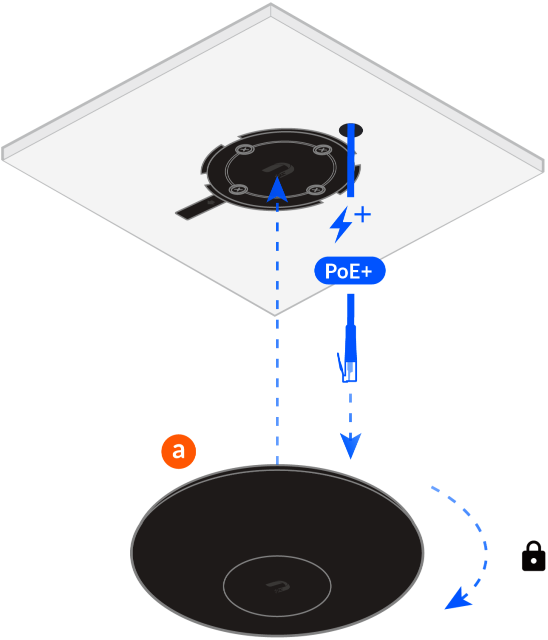

2

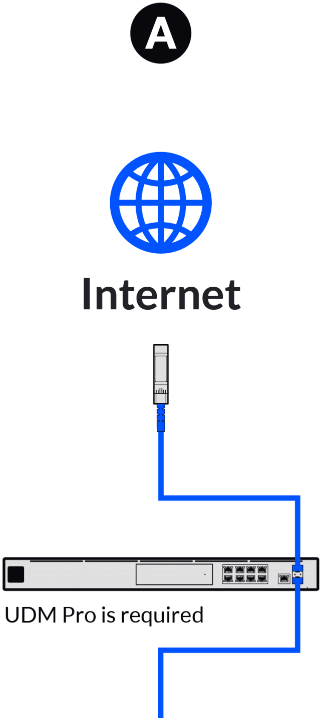

UDM Pro is required

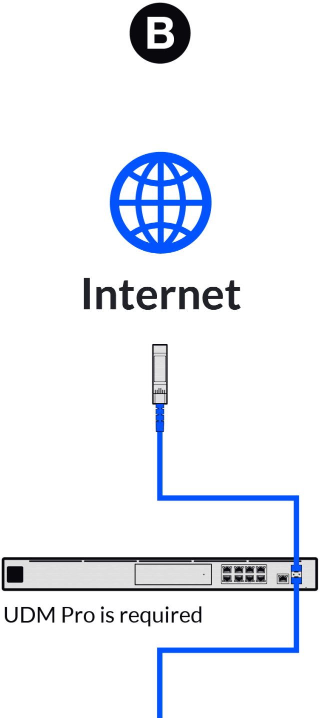

UDM Pro is required

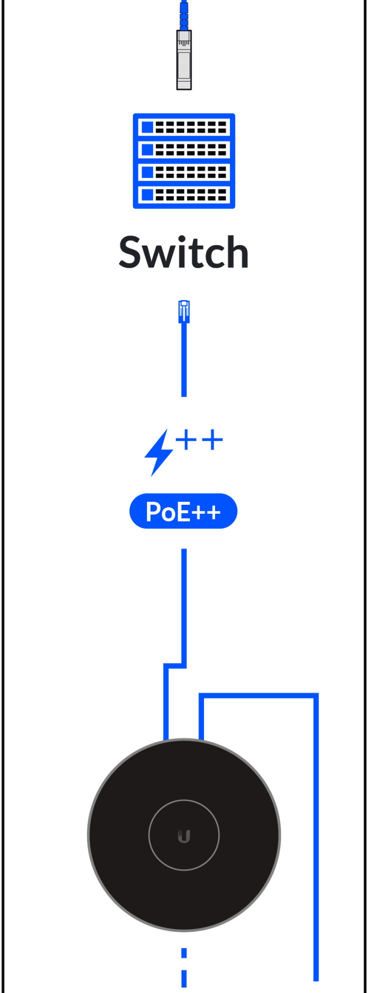

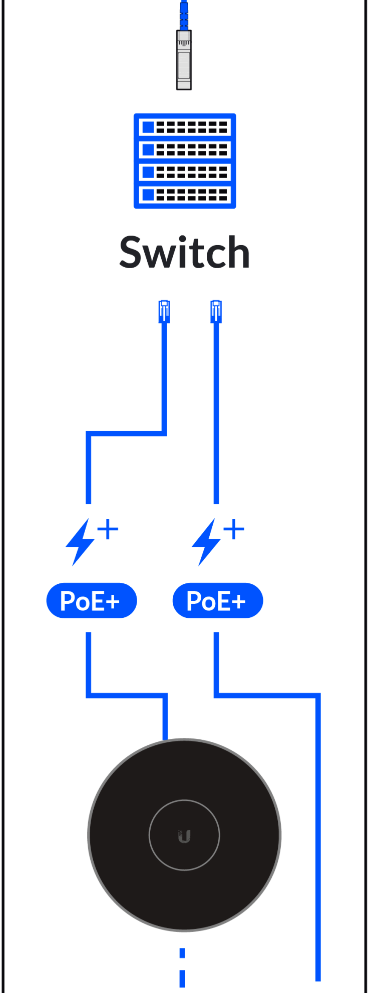
Switch
PoE+
PoE+

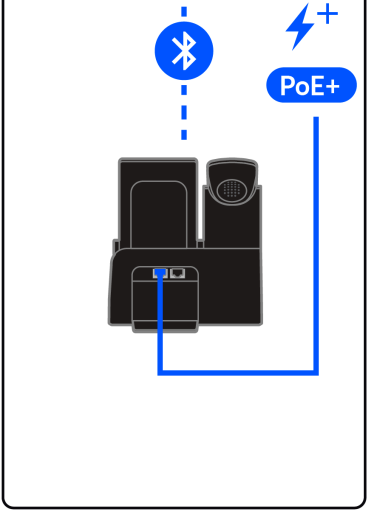

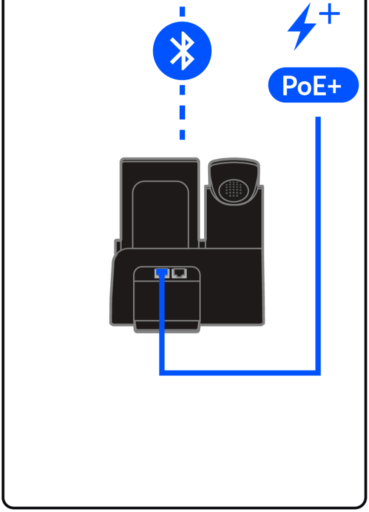

3

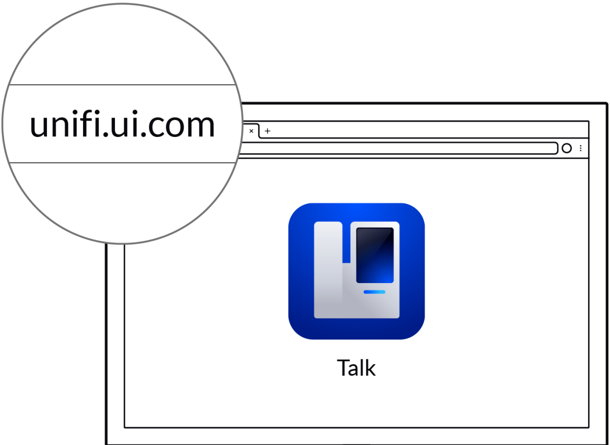
unifi.ui.com
Talk

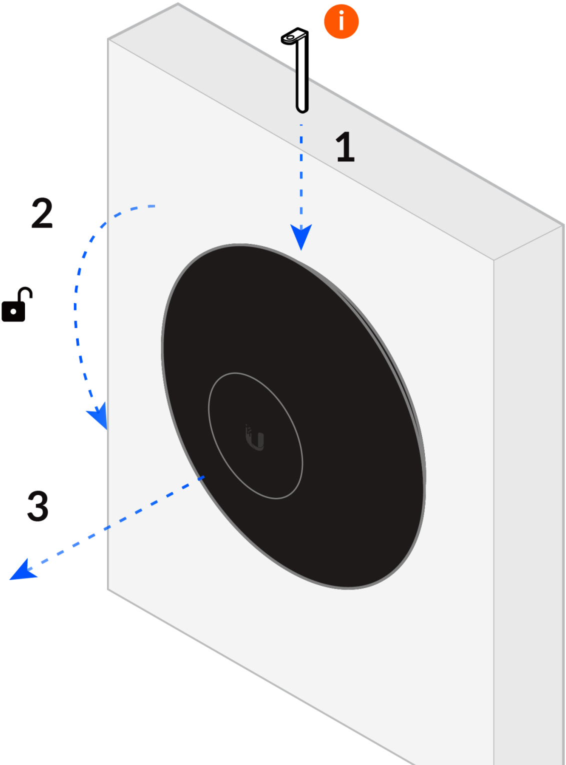

Get Answers
help.ui.com

UI Support