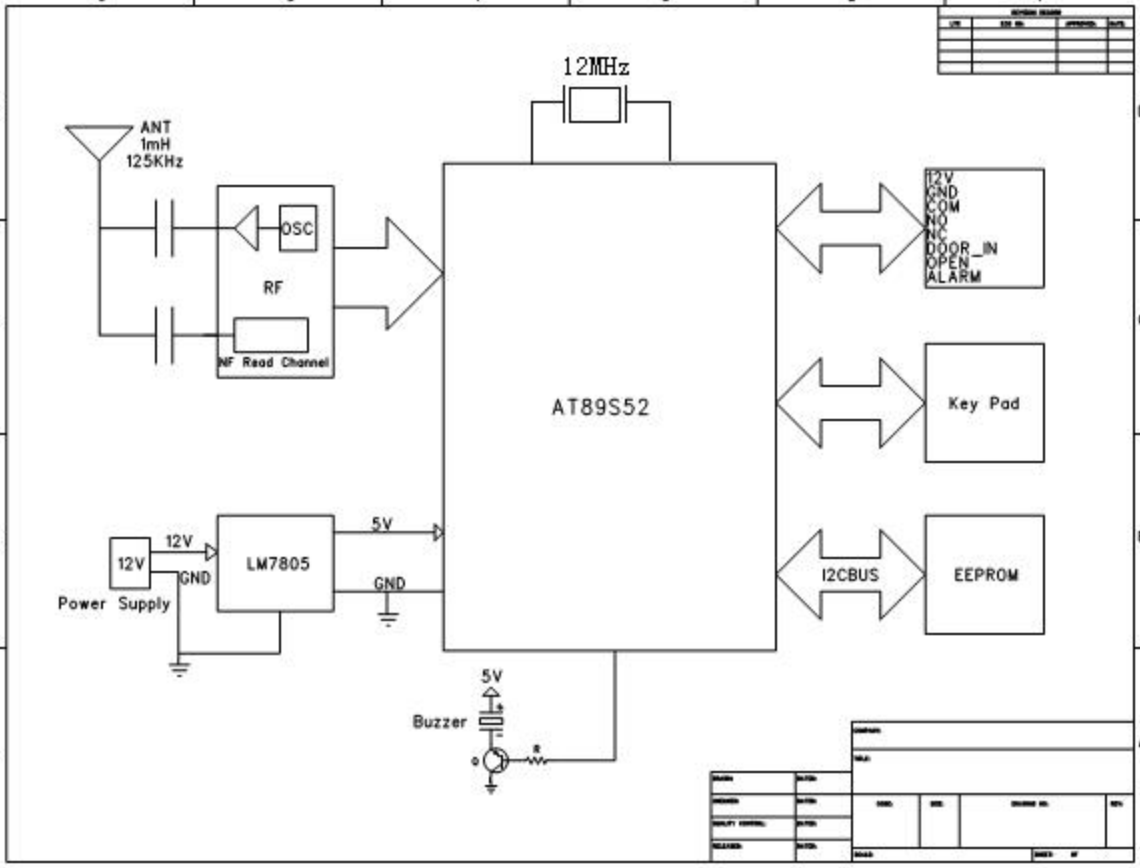
12MHz
ANT
1mH
125KHz
OSC
RF
RF Read Channel
AT89S52
12V
GND
COM
NO
NC
DOOR_IN
OPEN
ALARM
Key Pad
I2CBUS
EEPROM
12V
12V
GND
Power Supply
LM7805
5V
GND
5V
Buzzer
R