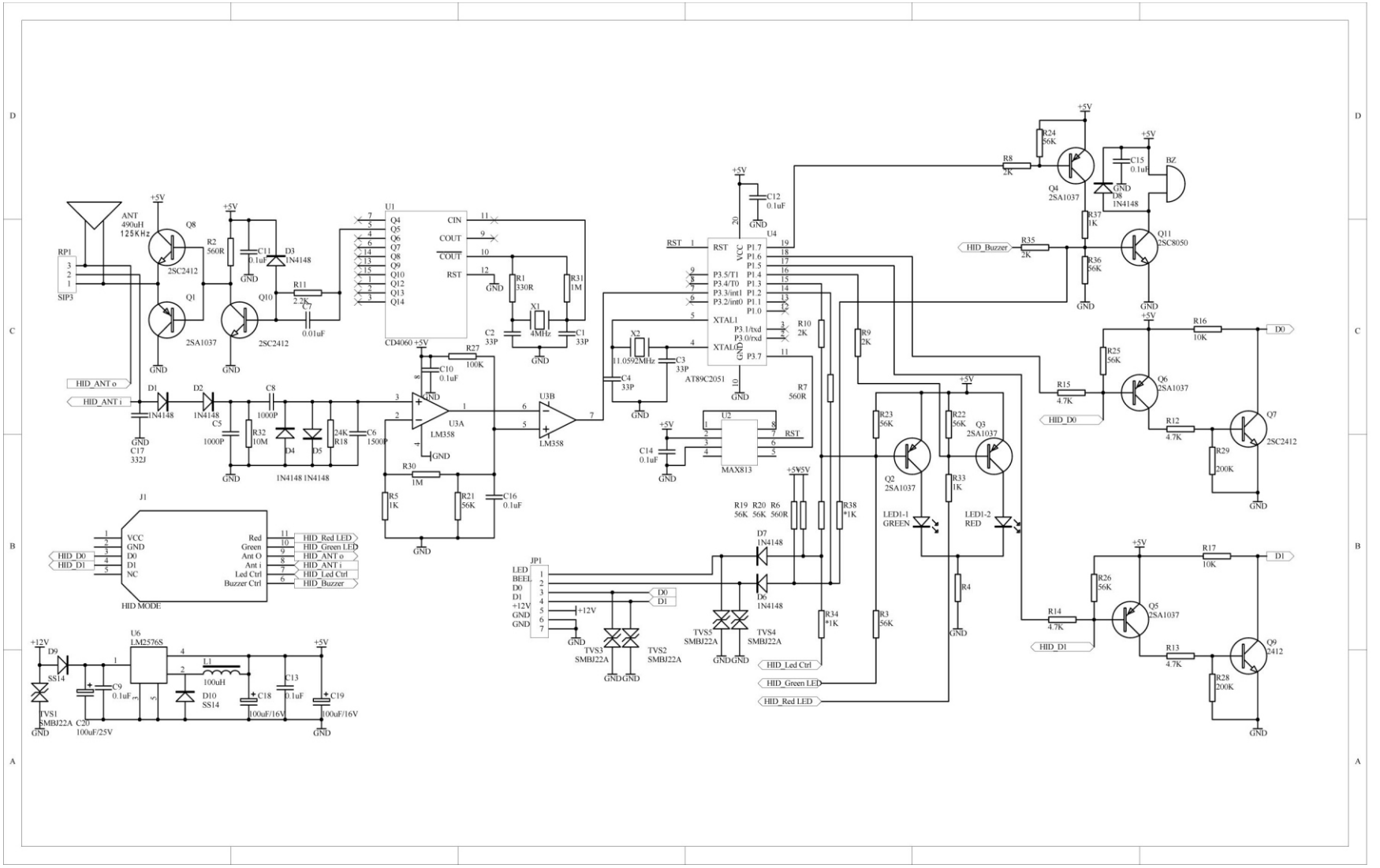
ANT
490uH
125KHz
RP1
SIP3
Q8
2SC2412
Q1
2SA1037
2SC2412
R2
560R
C11
0.1uF
D3
1N4148
R11
2.2K
C7
0.01uF
U1
CD4060
CIN
COUT
RST
R1
330R
R31
1M
X1
4MHz
C2
33P
C1
33P
HID_ANT o
HID_ANT i
D1
1N4148
D2
1N4148
C8
1000P
C5
1000P
R32
10M
D4
D5
1N4148 1N4148
R18
24K
C6
1500P
C17
332J
C10
0.1uF
R27
100K
U3A
LM358
U3B
LM358
R30
1M
R5
1K
R21
56K
C16
0.1uF
J1
VCC
GND
D0
D1
NC
Red
Green
Ant O
Ant i
Led Ctrl
Buzzer Ctrl
HID_Red LED
HID_Green LED
HID_ANT o
HID_ANT i
HID_Led Ctrl
HID_Buzzer
HID_D0
HID_D1
HID MODE
U6
LM2576S
L1
100uH
D10
SS14
C18
100uF/16V
C13
0.1uF
C19
100uF/16V
D9
SS14
TVS1
SMBJ22A
C9
0.1uF
C20
100uF/25V
U4
AT89C2051
RST
P1.7
P1.6
P1.5
P1.4
P1.3
P1.2
P1.1
P1.0
P3.5/T1
P3.4/T0
P3.3/int1
P3.2/int0
P3.1/txd
P3.0/rxd
P3.7
XTAL1
XTAL2
VCC
GND
X2
11.0592MHz
C3
33P
C4
33P
C12
0.1uF
R10
2K
R9
2K
R7
560R
U2
MAX813
C14
0.1uF
R19
56K
R20
56K
R6
560R
D7
1N4148
D6
1N4148
R38
*1K
R34
*1K
R3
56K
JP1
LED
BEEL
D0
D1
+12V
GND
GND
TVS5
SMBJ22A
TVS4
SMBJ22A
TVS3
SMBJ22A
TVS2
SMBJ22A
HID_Led Ctrl
HID_Green LED
HID_Red LED
R23
56K
R22
56K
Q2
2SA1037
Q3
2SA1037
R33
1K
R4
LED1-1
GREEN
LED1-2
RED
R24
56K
R8
2K
Q4
2SA1037
C15
0.1uF
D8
1N4148
BZ
R37
1K
R36
56K
Q11
2SC8050
HID_Buzzer
R35
2K
R16
10K
D0
R25
56K
Q6
2SA1037
R15
4.7K
R12
4.7K
Q7
2SC2412
R29
200K
R17
10K
D1
R26
56K
Q5
2SA1037
R14
4.7K
R13
4.7K
Q9
2412
R28
200K