Tripstrip block diagram

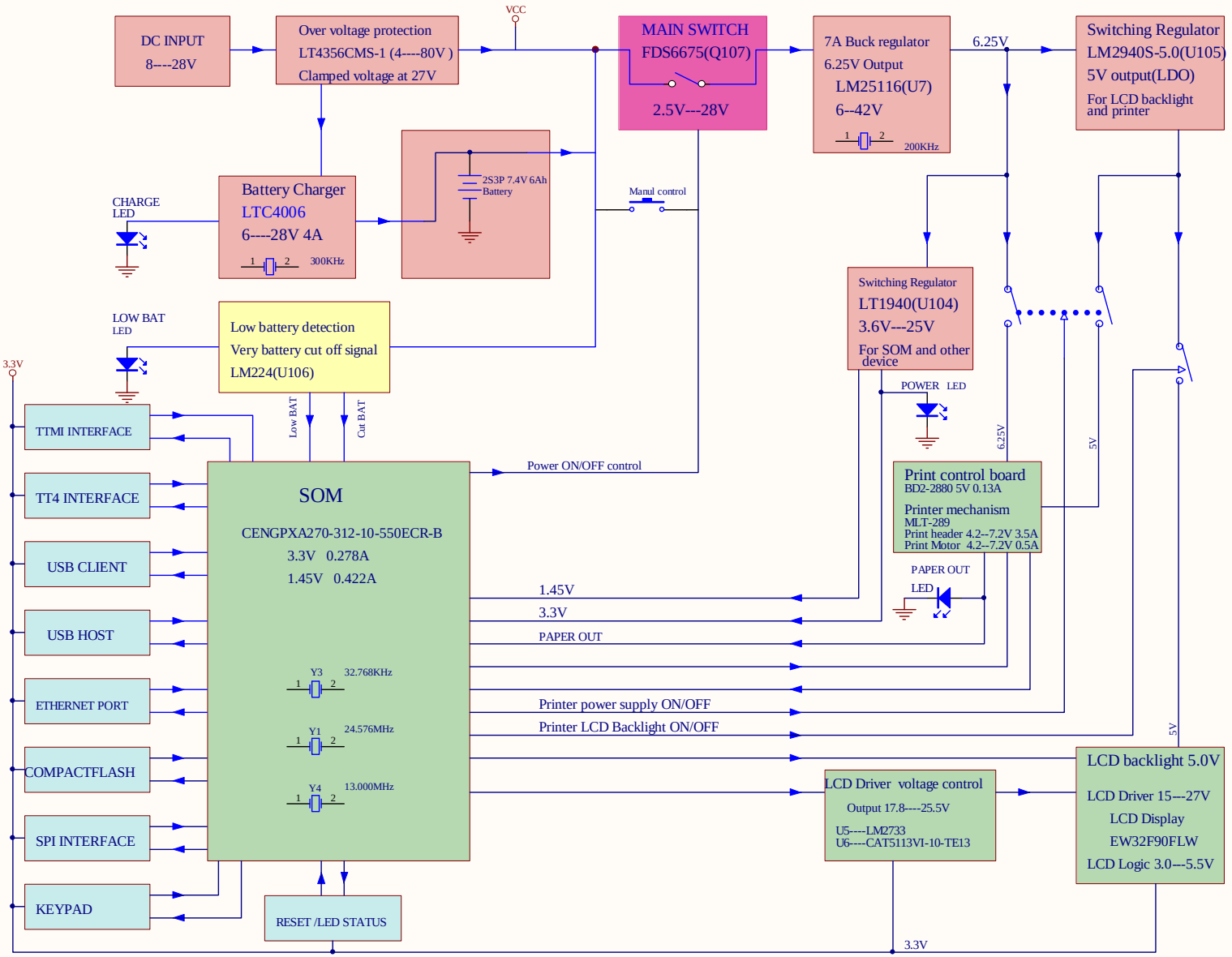

Title	Tripstrip II block diagram		
Size A3	Number Reference SCH V3.4		Revision REV2.0
Date: 2009-4-21		Sheet of	
File: H:\Previous Backup of TSII block diagram.Sch		Drawn By:	