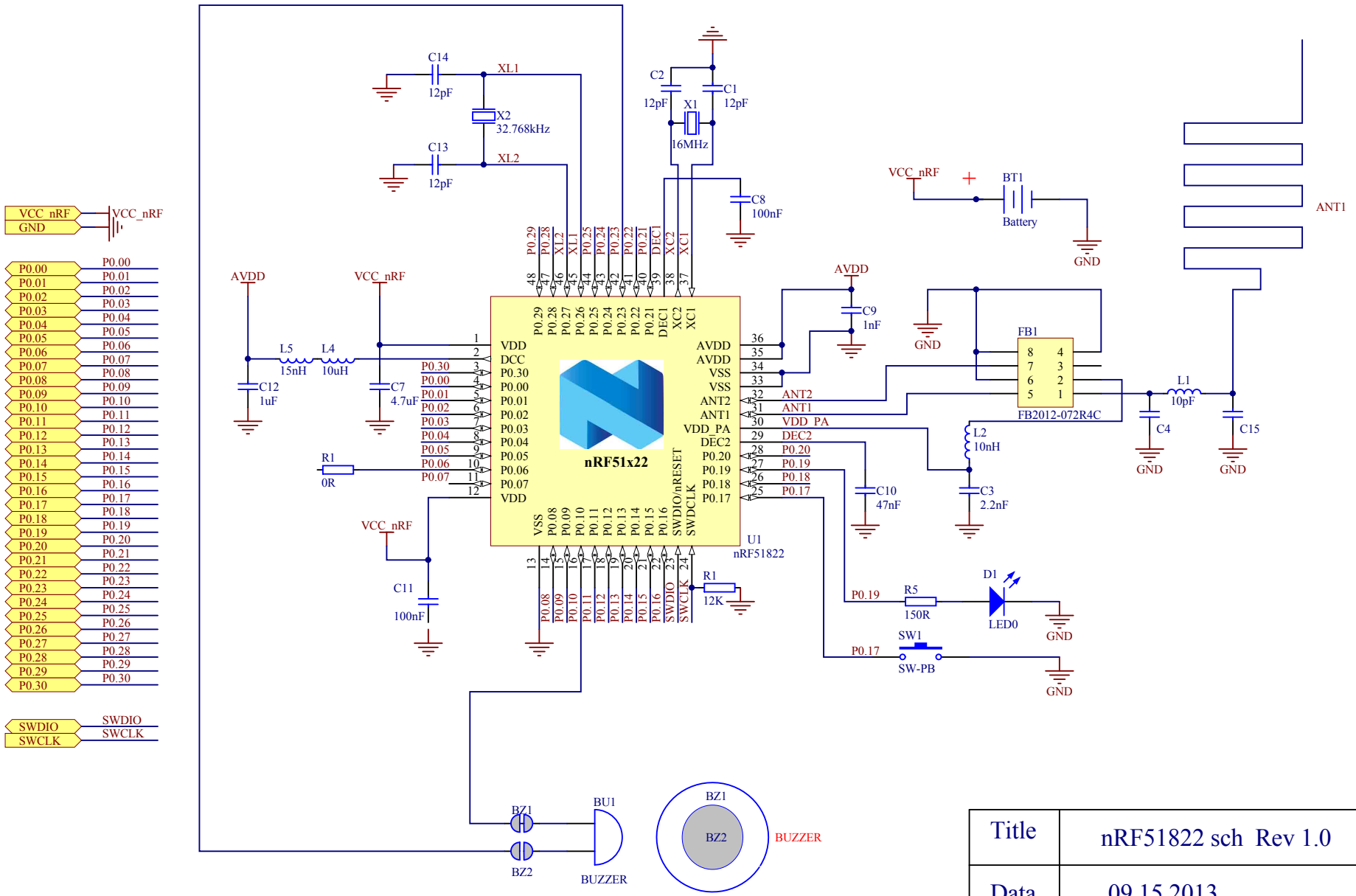
VCC_nRF
GND
P0.00
P0.01
P0.02
P0.03
P0.04
P0.05
P0.06
P0.07
P0.08
P0.09
P0.10
P0.11
P0.12
P0.13
P0.14
P0.15
P0.16
P0.17
P0.18
P0.19
P0.20
P0.21
P0.22
P0.23
P0.24
P0.25
P0.26
P0.27
P0.28
P0.29
P0.30
SWDIO
SWCLK
C14
12pF
XL1
X2
32.768kHz
C13
12pF
XL2
C2
12pF
X1
16MHz
C1
12pF
C8
100nF
BT1
Battery
ANT1
AVDD
VCC_nRF
L5
15nH
L4
10uH
C12
1uF
C7
4.7uF
R1
0R
C11
100nF
nRF51x22
U1
nRF51822
C9
1nF
FB1
FB2012-072R4C
L1
10pF
C4
C15
L2
10nH
C10
47nF
C3
2.2nF
R1
12K
D1
LED0
R5
150R
SW1
SW-PB
BZ1
BZ2
BU1
BUZZER
Title
nRF51822 sch Rev 1.0
Data
09.15.2013
Design