L1911MN / L1711MN Monitor
[FUNCTIONAL BLACK DIAGRAM]

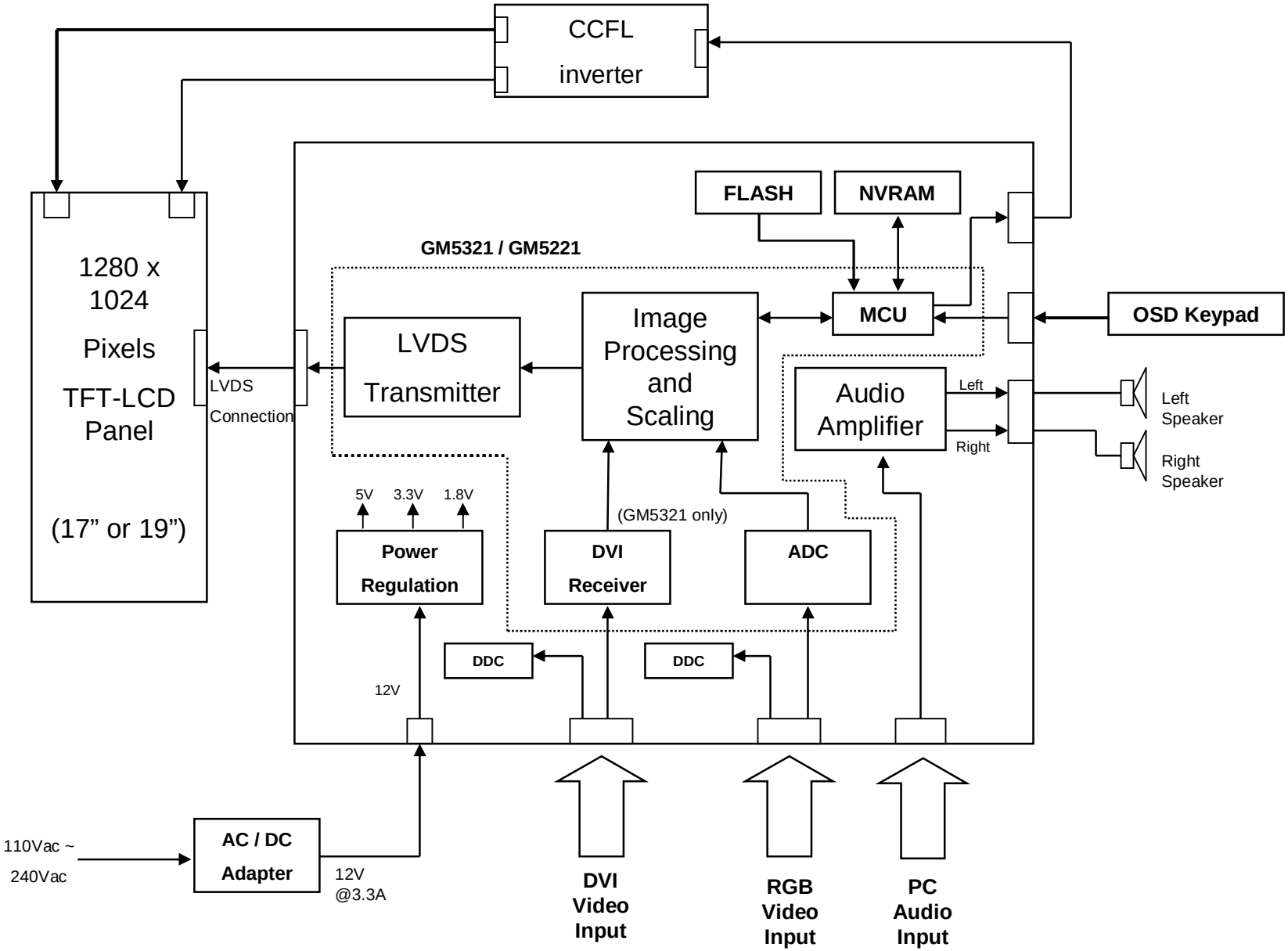

PDF created with pdfFactory trial version www.pdffactory.com