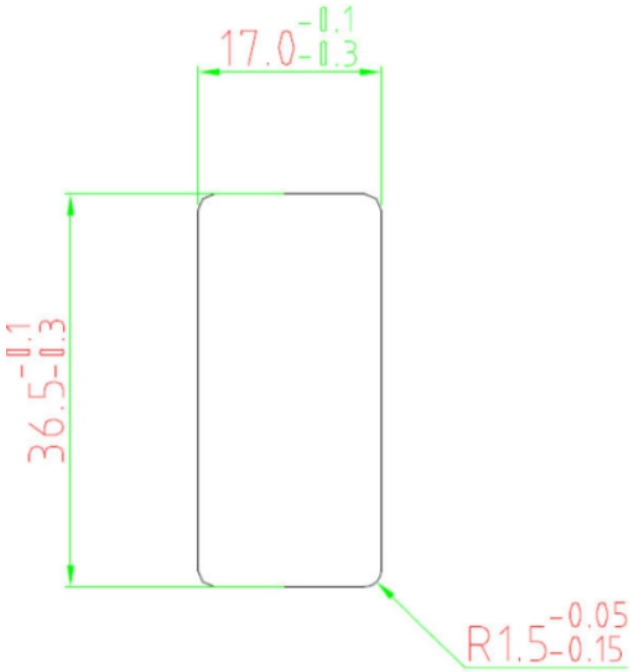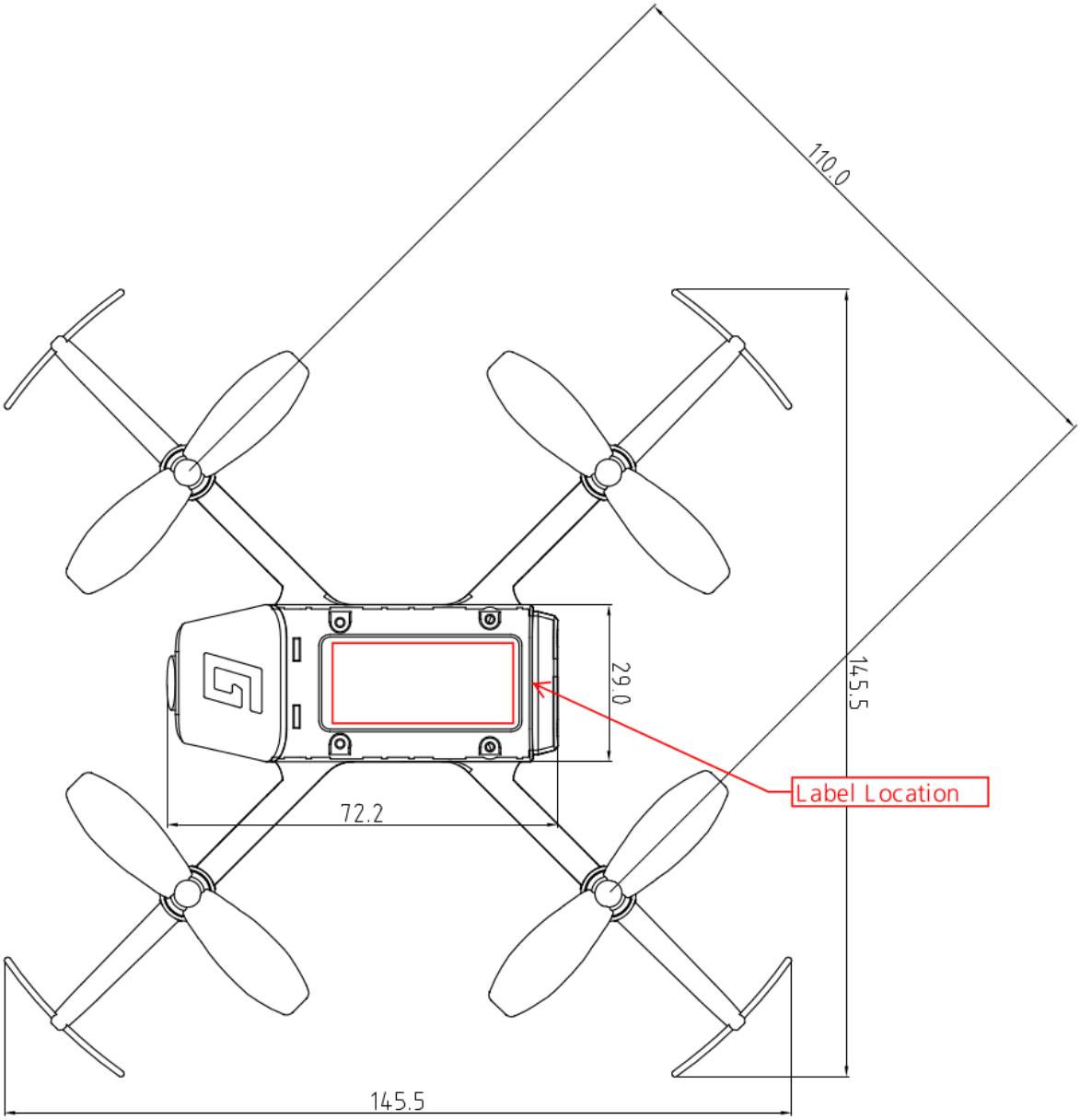Label and location