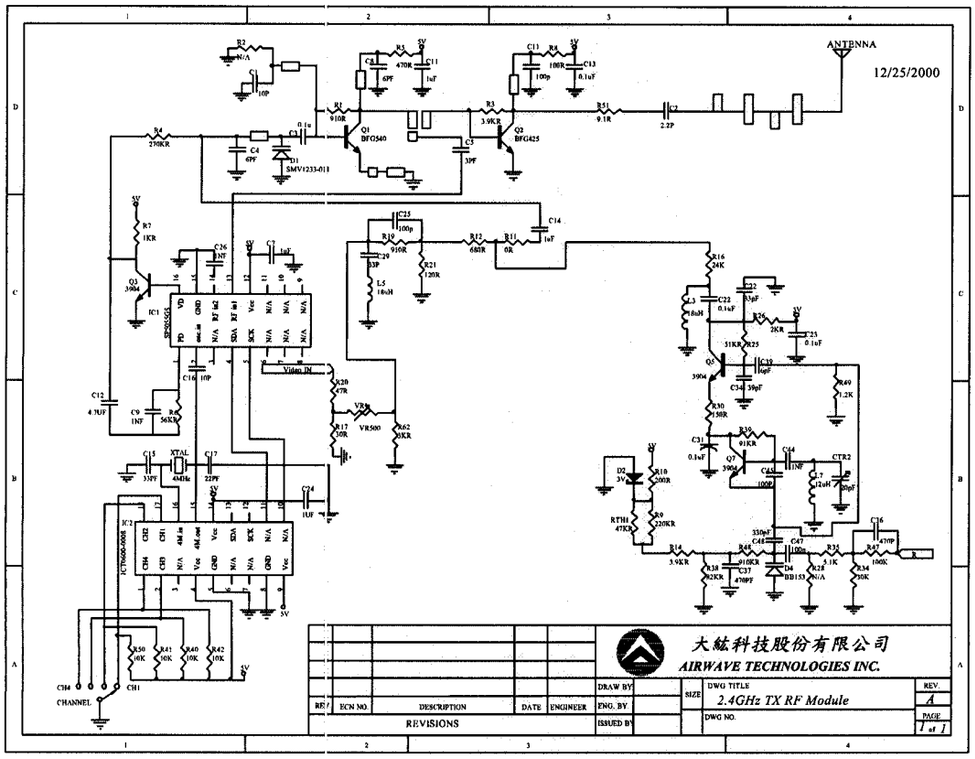
ANTENNA
12/25/2000
Q1 BFG540
Q2 BFG425
D1 SMV1233-011
IC1 EPM2000
IC2 RTM600-0008
Video IN
XTAL
CHANNEL
CH4
CH1
大紘科技股份有限公司
AIRWAVE TECHNOLOGIES INC.
DRAW BY
ENG. BY
ISSUED BY
SIZE
DWG TITLE
2.4GHz TX RF Module
DWG NO.
REV.
A
PAGE
1 of 1
REV
ECN NO.
DESCRIPTION
DATE
ENGINEER
REVISIONS

12/18/2000

AWV315 TX-03

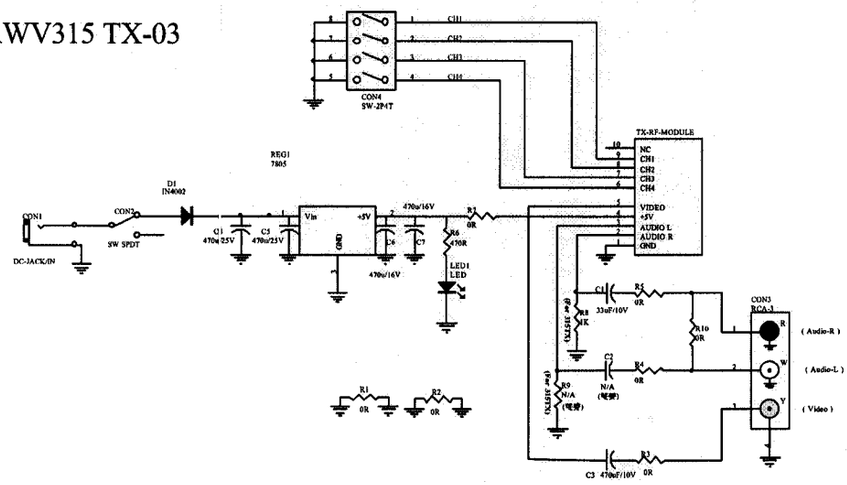

大紘科技股份有限公司
AIRWAVE TECHNOLOGIES INC.

REV.	ECN NO.	DESCRIPTION	DATE	ENGINEER

REVISIONS

DRAW BY
ENG. BY
ISSUED BY

SIZE

DWG TITLE: AWV315 TX-03

DWG NO.

REV. A

PAGE 1 of 1