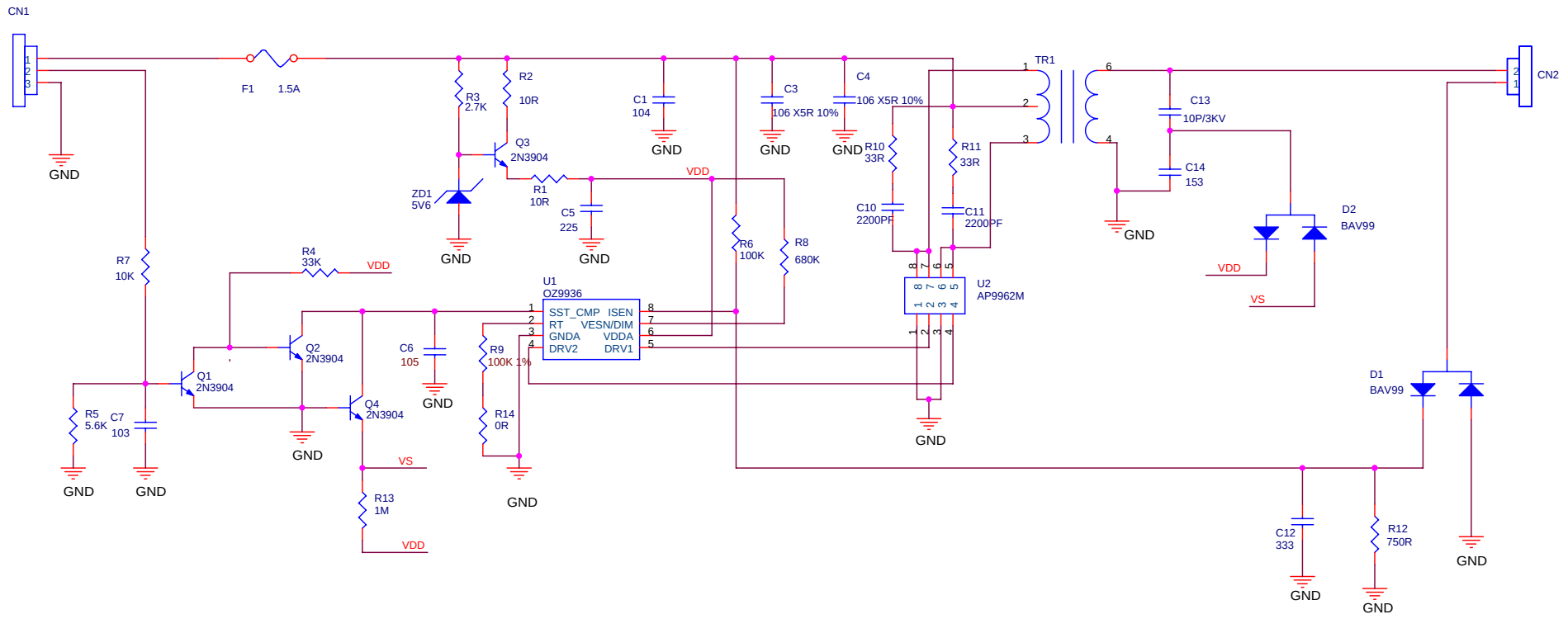


| | | |
|---|---|---|
| Title | PGD-55602-Inverter-2863C | |
| Size B | Document Number <Doc> | Rev 1.0 |
| Date: 2005-5-6 | Sheet 1 of 1 | |