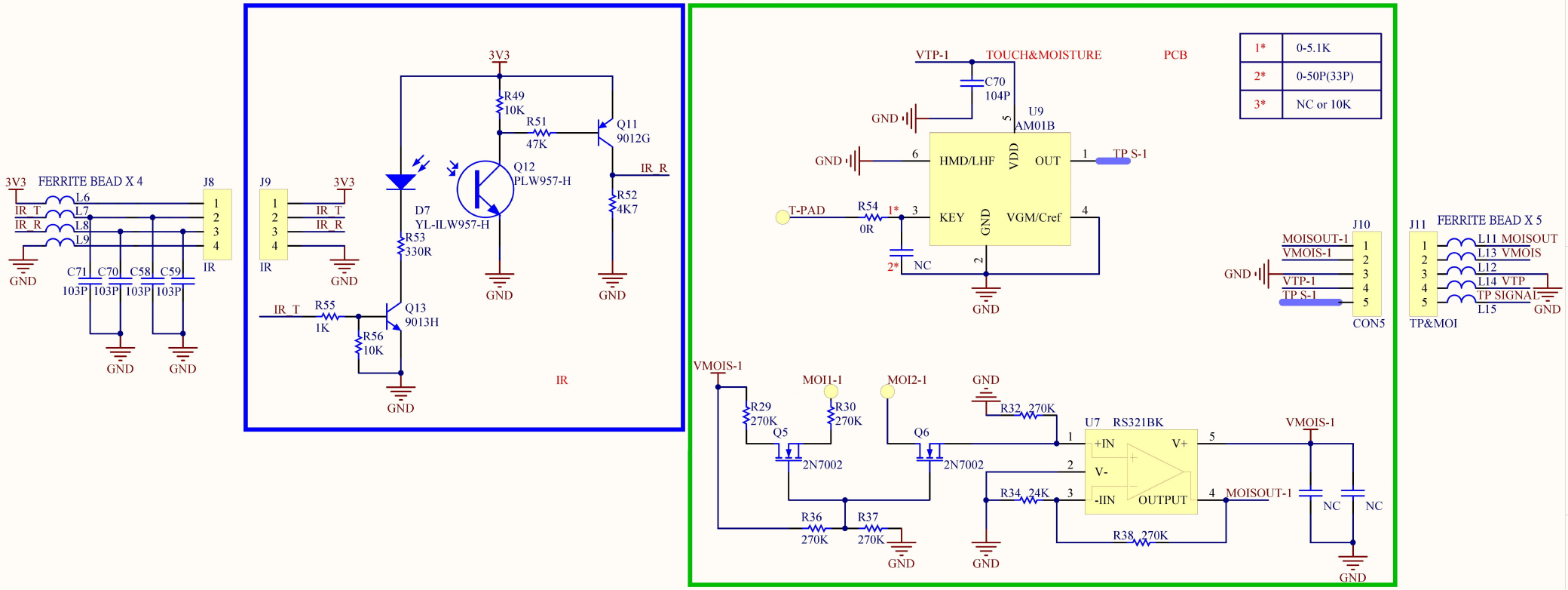

1*	0-5.1K
2*	0-50P(33P)
3*	NC or 10K

Title	PLANT PETZ	
Size A4	Number YL22006	Revision V6
Date: 2022/11/18		Sheet 3 of 3
File: E:\BaiduNetdiskWorkspace\..\PLANT PETZ V5-3.SchDoc		Drawn By: