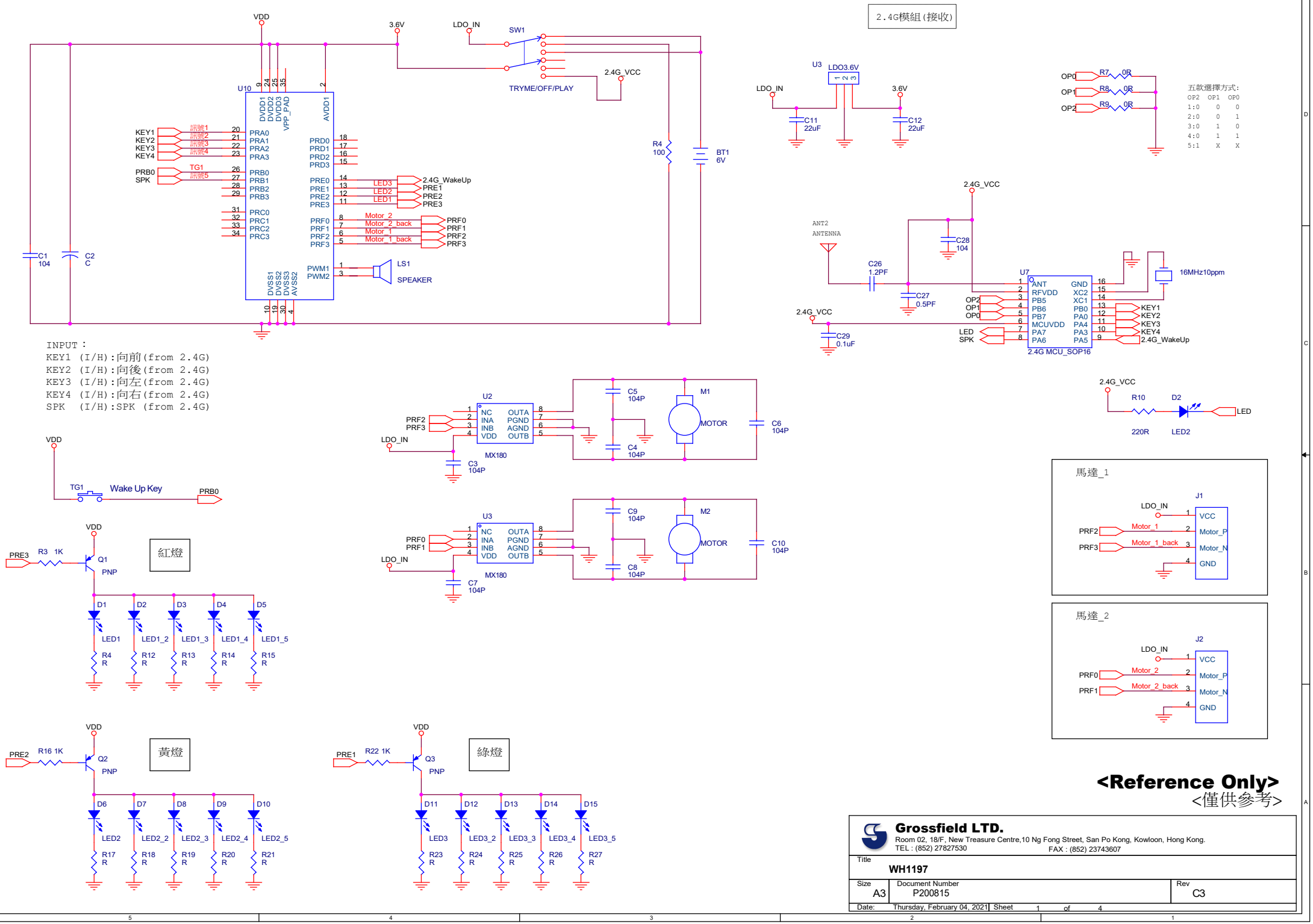

<Reference Only>
<僅供參考>

Grossfield LTD.
Room 02, 18/F, New Treasure Centre,10 Ng Fong Street, San Po Kong, Kowloon, Hong Kong.
TEL : (852) 27827530 FAX : (852) 23743607

Title		
WH1197		
Size A3	Document Number P200815	Rev C3
Date: Thursday, February 04, 2021	Sheet 1 of 4	